USER GUIDE

Built-in Oven

OB60
Single & Compact
models

NZ AU GB IE HK SG

Fisher&Paykel

CONTENTS

Safety and warnings	2
Introduction	13
The control panel	16
First Use	17
Using the Timer	20
Cooking guide	21
Oven functions	24
Cooking charts	30
Automatic cooking	36
User preference settings	38
Sabbath setting	40
Care and cleaning	42
Using the Self Clean function	56
Trouble shooting	59
Alert codes	64
Warranty and service	66
Energy guidelines (GB IE only)	68

IMPORTANT!

SAVE THESE INSTRUCTIONS

The models shown in this user guide may not be available in all markets and are subject to change at any time. For current details about model and specification availability in your country, please go to our website www.fisherpaykel.com or contact your local Fisher & Paykel dealer.

Your oven has been carefully designed to operate safely during normal cooking procedures. Please keep the following safety instructions in mind when you are using it:

⚠ WARNING!

Electrical Shock Hazard
Turn the oven off at the wall before replacing the oven lamp. Failure to follow this advice may result in electrical shock or death.

⚠ WARNING!

Fire Hazard

Follow the instructions on starting a Self Clean cycle carefully. Items made from combustible materials (for example: wood, fabric, plastic) may catch fire if left in the oven during a Self Clean cycle.

Do not place aluminium foil, dishes, trays, water or ice on the oven floor during cooking, as doing so will irreversibly damage the enamel; lining the oven with aluminium foil may even cause fire.

Never use your appliance for warming or heating the room. Persons could be burned or injured or a fire could start.

Storage in or on appliance: flammable materials should not be stored in an oven or near its surface.

Failure to follow this advice may result in overheating, burning, and injury.

⚠ WARNING!

Hot Surface Hazard
Accessible parts may become hot when in use.
To avoid burns and scalds, keep children away.
Use oven mitts or other protection when handling hot surfaces such as oven shelves or dishes.
Use care when opening the oven door.
Let hot air or steam escape before removing or replacing food.
Do not touch heating elements or interior surfaces of the oven. Heating elements may be hot even though they are dark in colour. Interior surfaces of an oven become hot enough to cause burns. During and after use, do not touch, or let clothing or other flammable materials contact heating elements or interior surfaces of the oven until they have had sufficient time to cool.
Other surfaces of the appliance may become hot enough to cause burns - among these surfaces are the oven vent, the surface near the oven vent, and the oven door.
Failure to follow this advice could result in burns and scalds.

⚠ WARNING!	
	Cut Hazard **Take care - some edges are sharp.** **Failure to use caution could result in injury or cuts.**

IMPORTANT SAFETY INSTRUCTIONS

To reduce the risk of fire, electrical shock, injury to persons or damage when using the oven, follow the important safety instructions listed below:

- **To reduce the risk of fire, electrical shock, injury to persons or damage when using the oven, follow the important safety instructions listed below:**
- **Read all the instructions before using the oven. Use the oven only for its intended purpose as described in these instructions.**
- **Proper installation: be sure your appliance is properly installed and earthed by a qualified technician.**
- **Isolating switch: make sure this oven is connected to a circuit which incorporates an isolating switch providing full disconnection from the power supply.**
- **Household appliances are not intended to be played with by children.**

- **Do not leave children alone. Children should not be left alone or unattended in the area where the appliance is in use. They should never be allowed to sit or stand on any part of the appliance.**
- **Children of less than 8 years old must be kept away from the appliance unless continuously supervised. This appliance can be used by children aged from 8 years and above, and persons with reduced physical, sensory or mental capabilities or lack of experience and knowledge, if they have been given supervision or instruction concerning the use of the appliance in a safe way and they understand the hazards involved. Cleaning and user maintenance shall not be done by children without supervision.**
- **Do not place heavy objects on the oven door.**
- **Wear proper apparel. Do not wear loose fitting or hanging garments when using the appliance. They could ignite or melt if they touch an element or hot surface and you could be burned.**

- **User servicing: do not repair or replace any part of the appliance unless specifically recommended in the manual. All other servicing should be referred to a qualified technician.**
- **Do not use water on grease fires. Smother the fire or flame or use a dry chemical or foam type extinguisher.**
- **Use only dry oven mitts or potholders. Moist or damp potholders on hot surfaces could result in burns from steam. Do not let potholders touch hot areas or heating elements. Do not use a towel or a bulky cloth for a potholder. It could catch fire.**
- **Do not heat unopened food containers. They can build up pressure that may cause the container to burst and result in injury.**
- **Safe food handling: leave food in the oven for as short a time as possible before and after cooking. This is to avoid contamination by organisms which may cause food poisoning. Take particular care during warm weather.**
- **Always keep oven vents unobstructed.**
- **Do not operate your appliance by means of an external timer or separate remote-control system.**

- **Caution: Hot air can blow from the vent at the top of the oven as part of the oven's cooling system.**
- **Placement of oven shelves: always position shelves in the desired location while the oven is cool (before preheating). If a shelf must be removed while the oven is hot, do not let the oven mitts or potholder contact hot heating elements in the oven or the base of the oven.**
- **Do not clean the oven seal or use any oven-cleaning products on it. It is essential for a good seal, which ensures that the oven operates efficiently. Care should be taken not to rub, damage or move it.**
- **Do not use oven cleaners, harsh/abrasive cleaning agents, waxes, or polishes. No commercial oven cleaner, oven liner, or protective coating of any kind should be used in or around any part of the oven. Do not use harsh/abrasive cleaners, scourers or sharp metal scrapers to clean the oven door glass since they scratch the surface, which may result in the glass shattering.**
- **Clean only the parts listed in this manual.**

- **Do not use a steam cleaner to clean any part of the oven.**
- **Spillages must be removed before starting a Self Clean cycle.**
- **Before starting a Self Clean cycle, remove oven shelves, side racks, and all other cookware/utensils, and wipe up large food spills or grease deposits.**
- **Before starting a Self Clean cycle, make sure you move any pet birds to another, closed and well ventilated room. Some pet birds are extremely sensitive to the fumes given off during a Self Clean cycle and may die if left in the same room as the oven during such a cycle.**
- **During a Self Clean cycle, the oven reaches higher temperatures than it does for cooking. Under such conditions, the surfaces may get hotter than usual and children should be kept away.**
- **Do not store things children might want above the oven. Children could be burned or injured while climbing on the oven to retrieve items.**

- **Do not install or operate the appliance if it is damaged or not working properly. If you receive a damaged product, contact your dealer or installer immediately.**
- **Use only bakeware approved for oven use. Follow the bakeware manufacturer's instructions.**

INTRODUCTION

Congratulations on your new purchase. Your Fisher & Paykel oven has a number of features to make cooking a great experience for you:

- a wide choice of oven functions
- intuitive controls and displays

Before you start

- Make sure the installer has completed the 'Final checklist' in the Installation instructions.
- Read this guide, taking special note of the 'Safety and warnings' section.
- Remove all packaging and dispose of it responsibly. Recycle items that you can.
- Fit the side racks and catalytic panels (see 'Fitting the side racks and catalytic panels').
- We recommend you then condition the oven, using the instructions following.

Note: Not all accessories are provided with all models. To purchase other accessories, contact your nearest Fisher & Paykel Authorised Service Centre, Customer Care or visit our local website listed on the back cover.

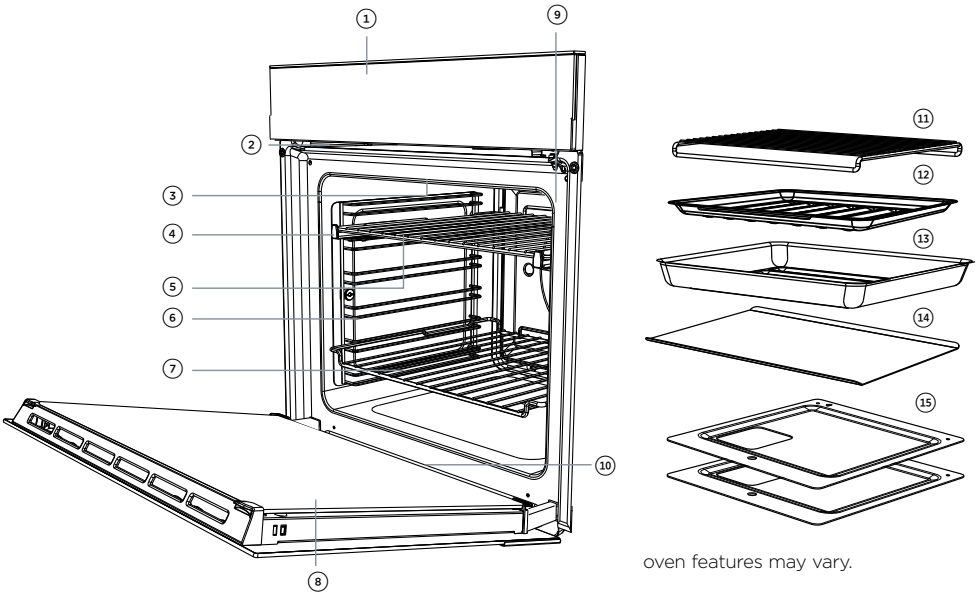

oven features may vary.

1. Control panel
2. Oven vent louvres
3. Oven light
4. Sliding shelf support
5. Wire shelf
6. Side rack
7. Step down oven wire shelf
8. Oven door and handle
9. Oven seal
10. Drip channel

Accessories:

11. Grill rack
12. Grid
13. Roast Dish
14. Flat baking tray
15. Catalytic panels (suitable for some models only).

Fitting the side racks and catalytic panels (some models only)

You will find your side racks, catalytic panels (some models only) and sliding shelf supports in the accessory box supplied with your oven.

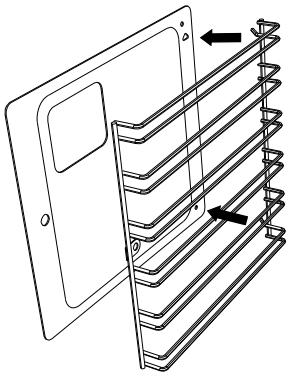

Fit the catalytic panel to the side rack

① Ensure the panels are placed the correct way around: the cutout fits over the light and the hole for the fixing screw goes to the front of the oven. (Note: panels should sit flush against the oven wall).

② Fit the rear prongs of the side rack through the holes in the catalytic panel.

Fit the side racks

① Slide the rear prongs of the side rack into the holes at the rear of the oven

② Fit the side rack front tab (and catalytic panel if fitted) over the fixing screw.

③ Replace the fixing nut. You may use a coin to tighten the nut.

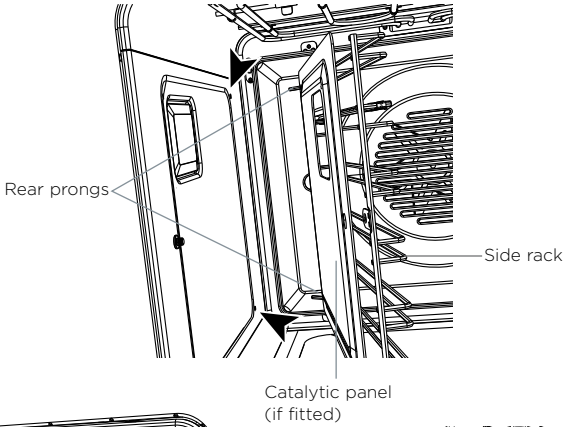

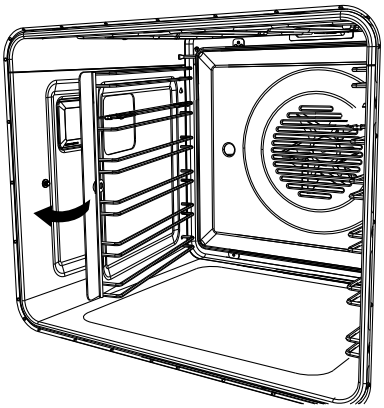

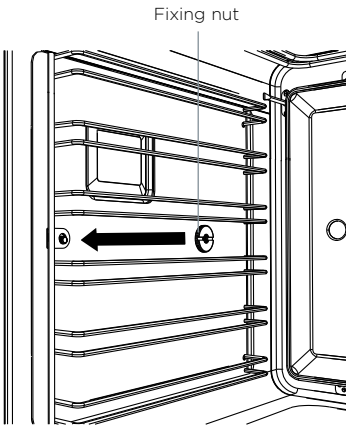

Fitting the sliding shelf supports

IMPORTANT!

Compact ovens only:
The sliding shelf supports cannot be used on shelf positions 3 and 4.

To fit

1. Ensure the slides are the correct way around (the front of the slide has the triangular shaped tab as shown).
2. Fit the top of the clips over the side rack, the front clip should be fitted as close to the front of the side rack as possible. Make sure the rear clip has engaged.
3. Rotate the slide down and 'click' the bottom of the clips into place.

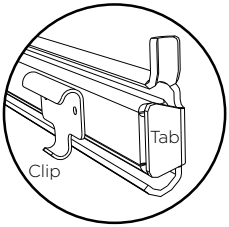

Front of Left Hand Slide

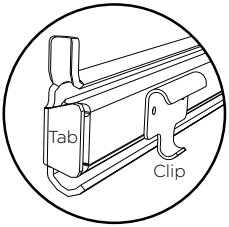

Front of Right Hand Slide

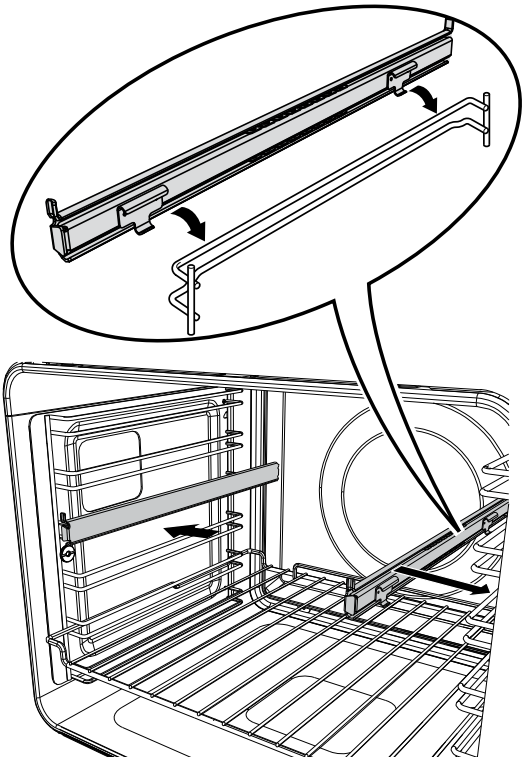

THE CONTROL PANEL

Illustrative purposes only - oven function indicators may vary.

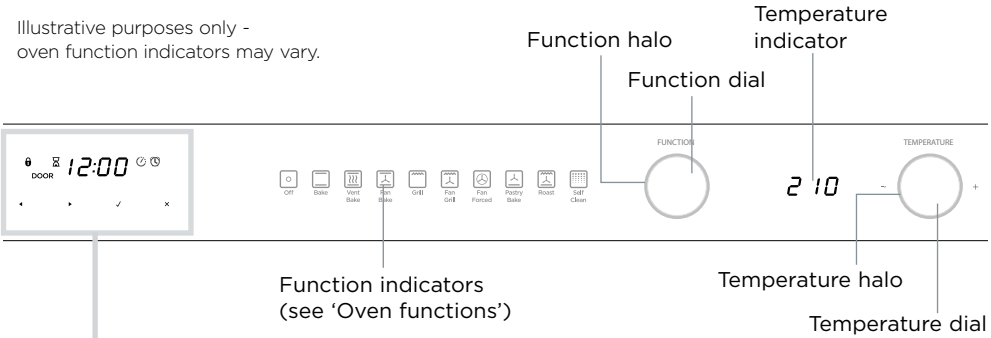

Display

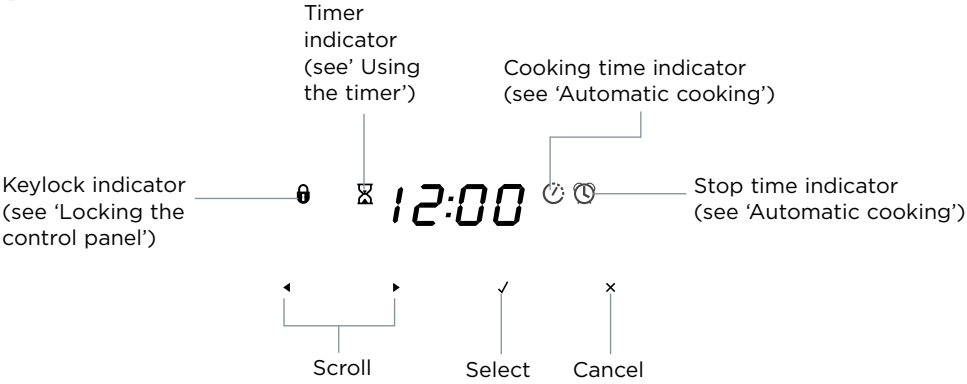

Using the touch controls

- Use the ball of your finger, not its tip. The controls respond to touch, so you don't need to apply any pressure.

Locking the control panel

This function is to prevent accidental use of the oven (eg by children). When locked the controls are unresponsive and the oven will not turn on.

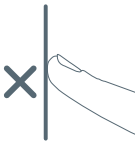

To lock:
Touch and hold the select ✓ control until the indicator light comes on.

To unlock:
Touch and hold the cancel × control.

Setting the Clock

When your oven is first turned on, or after a power cut, the display will flash . You will need to set the clock in order to use the oven.

① The display will flash 24 Hr

② Touch the right scroll ▸ control to scroll between 24 Hr and 12 Hr

③ Touch the select ✓ control to confirm.

④ Touch the left and right scroll ◂ ▸ controls to set the time.

⑤ Touch the select ✓ control to confirm.

- The time set will now be steadily lit.

To change the time

You set the clock within the user preference menu.

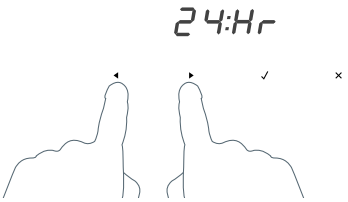

1. To enter the user preference menu touch and hold the left and right scroll ◀ ▶ controls together for 3 seconds.
   - Either 12 Hr or 24 Hr will be displayed.
2. Touch the select ✓ control to confirm. The display will flash.

5. Touch the left and right scroll ◀ ▶ controls to set the time.
6. Touch the select ✓ control to confirm.

3. Touch the right scroll ▶ control to scroll between 24 Hr, 12 Hr or OFF to turn the display off (see 'Setting User preferences' for more information).
4. Touch the select ✓ control to confirm.

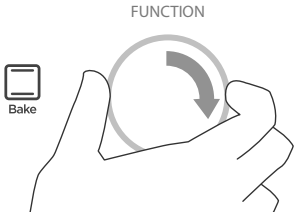

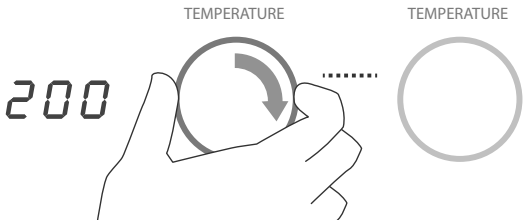

① Select the Bake function.
- The halo will glow white.
- Each function has a preset temperature and so the oven will start heating at the Bake preset temperature of 180°C.

② Set the temperature to 200°C for 30 minutes.
- While the oven is heating up, the temperature halo will glow red and the temperature indicator will alternately show the actual and set temperatures.
- When the oven has reached set temperature, a tone will sound and the halo will turn white.

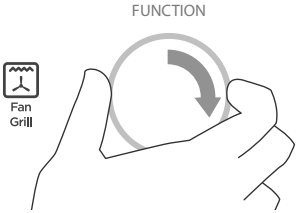

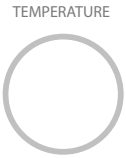

③ After 30 minutes is up, select the Fan Grill function.

④ Leave the temperature at 200°C for 5 minutes.
- The halo will remain white.

⑤ Now select the Fan Forced Function. Leave the temperature at 200°C for 20 minutes.

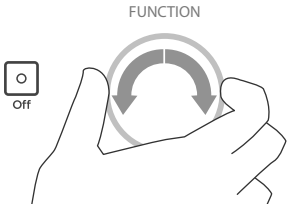

⑥ When you have finished, turn the function dial to Off. The halos will go out.

- There will be a distinctive smell and a small amount of smoke during the conditioning process as manufacturing residue is burnt off. This is normal, but make sure the kitchen is well ventilated during the conditioning.
- Once cooled, wipe out the oven with a damp cloth and mild detergent, and dry thoroughly.

- You can use the timer at any time, even if you are not using the oven.
- The timer counts down in minutes (hr:min) until the last hour of cooking when it will countdown in seconds (min:sec).
- You can set the timer for up to 23 hours 59 minutes.

IMPORTANT!

The timer does NOT turn the oven off.

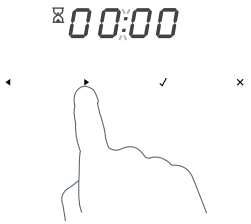

① Select the timer ⌛ by touching the right scroll ▸ control once.
- The timer ⌛ indicator will appear and the colon will flash.

② Touch the select ✓ control to confirm.
- The display will flash to indicate the timer is ready to be set.

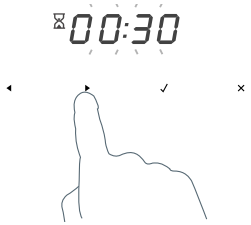

③ Set the time by touching the scroll ◂ ▸ controls.
- Holding the controls down will speed up the scrolling.

④ Touch the select ✓ control to confirm.
- The timer will then begin to count down.
- If you want to check the time of day, touch the cancel × control once. Touch the right scroll ▸ control to scroll back to the timer.

To modify the timer setting

① Make sure the display shows the remaining time counting down.
② Touch the select ✓ control.
③ Touch the scroll ◂ ▸ controls to set a new time.
④ Touch the select ✓ control to confirm.

To cancel the timer setting

① Make sure the display shows the remaining time counting down.
② Touch the cancel × control until the display shows the time of day and the timer ⌛ indicator disappears.

When the set time is up

- The display will show 0:00 and a tone will sound every few seconds.
- Touch any control to stop the tone sounding. The display will revert to showing the time of day.

General guidelines

This oven has been designed to utilise its four elements and rear fan in differing combinations to provide you with enhanced performance and a wide range of functions, allowing you to cook all types of food to perfection.

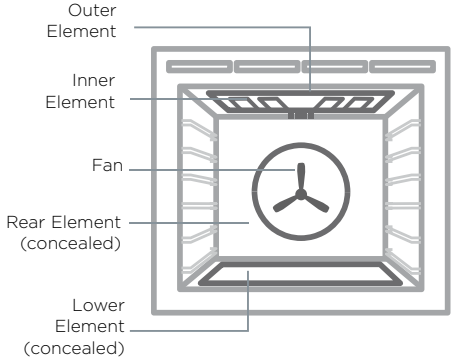

Shelf positions - Full size ovens

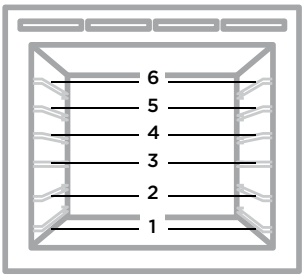

Shelf positions - Compact ovens

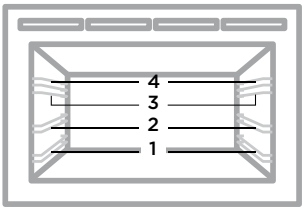

BAKING

- For best results when baking, always pre heat your oven. The temperature indicator will go out when the pre-set temperature is reached.
- While the oven is heating the grill element may be on.
- Do not open the door until at least 3/4 of the way through cooking.
- Make sure cake pans do not touch each other or the sides of the oven.
- When baking double the recipe (especially cookies) you may need to increase the time by a couple of minutes.
- Your cookware will influence baking times. Dark pans absorb the heat more quickly than reflective pans; glass cookware may require a lower temperature
- Multi-shelf baking may also require a slight increase in cooking time.
- Always leave a space between shelves when multi-shelf cooking to allow the air to circulate.
- Use the Warm function (some models only) for proving bread dough.

Shelf Position Guide

Place your baking on a shelf that will have the top of your pan near the centre of the oven cavity.

ROASTING

- Some models have a dedicated Roast function. This is designed to brown the outside of the meat but still keep the inside moist and juicy.
  If your oven does not have a Roast function, we recommend you use Fan Bake or Fan Forced.
- Boneless, rolled or stuffed roasts take longer than roasts containing bones.
- Poultry should be well cooked with the juices running clear and an internal temperature of 75°C.
- If using a roasting bag, do not use the Roast function (some models only). The initial searing stage is too hot for roasting bags. Use Fan Bake or Fan Forced and follow the manufacturer's instructions.
- When using the Roast function (some models only), do not cover your roast, as this will stop the searing process browning the outside of the meat. If you prefer to roast in a covered pan, use the Fan Bake function instead and increase the temperature by 20°C.
- Cook larger cuts of meat at a lower temperature for a longer time. The meat will cook more evenly.
- Always roast meat fat side up. That way, basting may not be required.
- Always rest the meat for at least 10 minutes after roasting to allow the juices to settle. Remember the meat will continue to cook for a few minutes after removing it from the oven.
- Try our new Vent Bake function (some models only) as an alternative for roasting pork. The drier atmosphere will help to perfect your crackling.

Shelf Position Guide

Place the meat on a shelf so that the meat is in the centre of the oven or lower.

GRILLING

- This is a healthier alternative to frying.
- Always grill with the oven door completely shut.
- If you use glass or ceramic pans, be sure they can withstand the high temperatures of the grill.
- To avoid piercing the meat and letting juices escape, use tongs or a spatula to turn the meat halfway through cooking.
- Brush meat with a little oil to help keep the meat moist during cooking. Alternatively marinade the meat before grilling (but be aware that some marinades may burn easily).
- Where possible grill cuts of meat of a similar thickness at the same time. This will ensure even cooking.
- Always keep a close watch on your food while grilling to avoid charring or burning.

Shelf Position Guide

- For thinner cuts of meat, toasting or browning foods, use a higher shelf position.
- Thicker cuts of meats should be grilled on lower shelves or at a lower grill setting to ensure even cooking.

REHEATING

- Use Bake, Fan Bake or Vent Bake (some models only) to reheat food.
- Bake and Vent Bake (some models only) are particularly good for reheating pastry based items, as the base heat will help re-crisp the pastry case.
- Always reheat food to piping hot. This reduces the risk of contamination by harmful bacteria.
- Once hot, use the Warm function (some models only) to keep the food warm. **Never reheat a food more than once.**

Drip Channel

Any condensation that is formed during the cooking process will collect in the drip channel. This can be wiped out using a sponge once the oven has cooled.

IMPORTANT!

- **Depending on your model, you may only have some of these functions.**
- **Use all the functions with the oven door closed.**

Bake

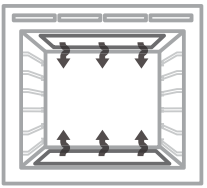

upper outer and lower elements

- Heat comes from both the upper and lower elements. The fan is not used in this function.
- Ideal for cakes and foods that require baking for a long time or at low temperatures.
- This function is not suitable for multi-shelf cooking.

Ideal for moist foods that take a longer time to cook eg rich fruit cake, or bread in combination with Vent Bake.

Vent Bake
(some models only)

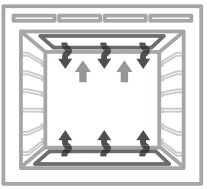

upper outer and lower elements with additional venting

- Heat is produced by the upper and lower elements and additional oven venting is used to remove excess moisture, reducing the formation of steam and condensation.
- Vented baking allows the moisture content of the oven to be reduced, without compromising the temperature.
- The venting system results in gentle air movement without the need to use a fan.
- It provides gentle browning without the `drying out' effect of a fan.
- Reducing the formation of condensation means it is perfect way to slow cook meat dishes.
- You may switch from Bake to Vent Bake for foods that like a moist (steamy) start to the cooking process and then benefit from a drier finish (such as bread).

Ideal for foods such as:
- meringues, pavlova
- Yorkshire pudding
- finishing off choux pastry, croissants, breads
- slow cooked meat dishes
- poached foods (fish, chicken)
- dishes where initial crisping of the outside is desired (eg pork belly)

Fan Bake

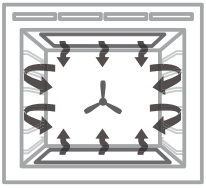

fan plus upper outer and lower elements

- The oven fan circulates hot air from the top outer and the lower elements and distributes it around the oven cavity.
- Food cooked tends to brown more quickly than foods cooked on the traditional Bake function.
- You may need to decrease the time from that recommended in traditional recipes.
- Use Fan Bake at a low temperature: 50°C for drying fruit, vegetables and herbs.

Ideal for single shelf baking that takes less than an hour to cook – foods such as muffins, scones and cupcakes or things like enchiladas.

Grill

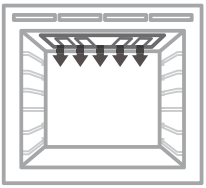

upper inner and outer elements

- Intense radiant heat is delivered from both top elements.
  There are 9 steps between ‘Lo’ and ‘Hi’ (100% power).
- Preheating is not essential although some people prefer to allow the element to heat for a few minutes before they place food under the grill.
- The temperature halo will remain red while using the grill function.
- The most suitable function for ‘finishing off’ many meals, for example browning the top of potato gratin and frittata.

Ideal for toasting bread or for top browning to ‘finish off dishes’.

Fan Grill

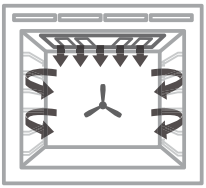

fan plus upper inner and outer elements

- This function uses the intense heat from the elements for top browning and the fan to ensure even cooking of foods.
- Meat, poultry and vegetables cook beautifully; food is crisp and brown on the outside while the inside remains moist and tender.

Ideal for whole chicken, tenderloin of beef or grilling your favourite chicken, fish or steak.

Fan Forced

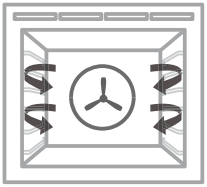

fan and rear element

- By using the central rear heating element and fan, hot air is blown into the cavity, providing a consistent temperature at all levels, making it perfect for multi-shelf cooking.
- Trays of cookies cooked on different shelves are crisp on the outside and chewy in the middle.
- Meat and poultry are deliciously browned and sizzling while remaining juicy and tender.
- Casseroles are cooked to perfection and reheating is quick and efficient.
- When multi-shelf cooking it is important to leave a gap between trays (eg use shelves 3 & 5) to allow the air to move freely. This enables the browning of foods on the lower tray.
- If converting a recipe from Bake to Fan Forced, we recommend that you decrease the bake time or decrease the temperature by approximately 20°C.
- For items with longer bake times (eg over an hour) it may be necessary to decrease both time and temperature.

Ideal for multi-shelf cooking biscuits, cookies, scones, muffins and cupcakes.

Pastry Bake
(some models only)

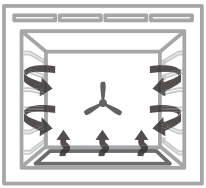

fan plus lower element

- The fan circulates heat from the lower element throughout the oven.
- Excellent for cooking pizza as it crisps the base beautifully without overcooking the topping.

Ideal for foods such as sweet and savoury pastry foods and delicate foods that require some top browning eg frittata, quiche.

Roast
(some models only)

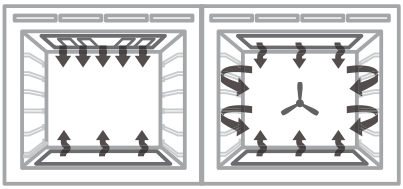

fan plus upper and lower elements

- A two-step program. An initial 20 minute searing stage crisps and browns the roast and caramelises the outside of the meat, then the temperature drops to the level you have preset for the remainder of the cooking period, producing a tender and juicy roast that is full of flavour.
- Oven does not require preheating.
- If desired, use the grill rack, splatter tray or place vegetables under the roast to allow the juices to drain away from your meat. This will allow the hot air to circulate under the meat as well.

Ideal for Roasting meat, chicken and vegetables.

Classic Bake
(some models only)

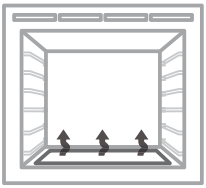

lower element only

- Heat comes from the lower element only, the fan is not used.
- This is the traditional baking function, suitable for recipes that were developed in older ovens.
- Bake on only one shelf at a time.
- The oven will be hotter at the top.

Ideal for foods that require delicate baking and have a pastry base, like custard tarts, pies, quiches and cheesecake or anything that does not require direct heat and browning on the top.

Warm
(some models only)

this is not a cooking function

- Provides a constant low heat of less than 90°C.
- Use to keep cooked food hot, or to warm plates and serving dishes. To reheat food from cold, use another oven function to heat the food piping hot and only then change to Warm, as this function alone will not bring cold food up to a high enough temperature to kill any harmful bacteria.

Proving bread

This function is perfect for proving bread dough.

① Select the Warm function
② Adjust the temperature down until the display shows `Lo'
③ Place dough in a lightly oiled bowl and cover with plastic wrap and/or a clean damp cloth
④ Place the bowl into the warmed oven on shelf position 1

Self Clean
(some models only)

this is not a cooking function

- The Self Clean cycle takes care of the mess and grime that is traditionally associated with oven cleaning.
- There are two Self-Clean cycles available:
  - Self clean (which takes a minimum of 4 hours) for normal cleaning and
  - Light self-clean (which takes a minimum of 3 hours) for lightly soiled ovens
- Always clean the inner door glass pane first.
- See 'Using the Self Clean function' for details.

- Shelf positions are counted from the base up (1 is the lowest, 6 (full size ovens) or 4 (compact ovens) is the highest). Position shelves before you turn the oven on.
- For best results preheat the oven to the required temperature.
- The grill element may come on while the oven is heating up.
- The halo on the temperature dial will change from red to white when the oven has reached the selected temperature. The display will only show the set temperature once the oven has finished preheating. The halo may change between white and red as the oven maintains its set temperature.
- Note: oven accessories may temporarily deform slightly when they become hot. This is normal and does not affect their function.

BAKING

FOOD		SHELVES
Biscuits	Plain	Single
		Multi
	Chewy choc chip	Single
		Multi
	Oatmeal	Single
Slices / Squares		Single
Cakes	Vanilla	Single
	Butter / Chocolate	Single
	Light fruit	Single
	Rich fruit	Single
	Sponge (single large)	Single
	Sponge (two small pans)	Single
Shortbread		Single
Muffins / Cupcakes		Single
		Multi
Scones		Single
		Multi
Meringues		Single
Bread Rolls		Single
Pastry	Phyllo	Single
	Flaky/Puff	Single
	Choux	Single
		Multi
	Croissants	Single
		Multi
Pies	Apple	Single
	Lemon Meringue	Single

COOKING CHARTS

The information in these charts are guidelines only. Refer to your recipe or the packaging and be prepared to adjust the cooking times and settings accordingly.

RECOMMENDED FUNCTION	SHELF POSITIONS (FULL OVENS)	SHELF POSITIONS (COMPACT OVENS)	TEMP (°C)	TIME (MINS)
Fan Bake	4	2	180-190	13-17
Fan Forced	3 and 5	1 and 3	160-170	13-17
Fan Bake	4	2	180-190	15-20
Fan Forced	3 and 5	1 and 3	160-170	15-20
Pastry Bake/Fan Bake	4	2	160-170	12-15
Pastry Bake/Fan Bake	3	2	160-165	15-20
Bake	4	2	160-165	30-35
Bake	4	2	160-180	50-60
Bake	2	2	155-165	1hr 30
Classic Bake/Bake	2	2	120-160	2.5 hrs
Bake	2	2	175	30-40
Bake	2	2	170-190	15-25
Pastry Bake/Fan Bake	3	2	130-140	20-25
Fan Bake	3	2	180-190	13-17
Fan Forced	2 and 4	1 and 3	160-170	16-21
Fan Bake	2	2	210-230	8-12
Fan Forced	1 and 3	1 and 3	210-230	8-12
Vent Bake/Bake	1	2	100-120	60
Bake then Vent Bake	4	2	195-210	25-35
Fan Bake	3	2	190-200	15-25
Vent Bake/Pastry Bake	3	2	185-200	20-30
Vent Bake/Pastry Bake				
Fan Forced	2	1 and 3	200-210	30-35
Bake then Vent Bake		-		
Fan Forced	3	1 and 3	190-200	15-25
Pastry Bake/Fan Bake	2	2	190-200	25-30
Pastry Bake/Fan Bake	2	2	175-180	30-40

SAVOURY

FOOD		SHELVES
Pies	Chicken / Steak / Mince	Single
Sausage Rolls		Single
Meat Loaf		Single
Pizza		Single
Lasagne		Single
Quiche		Single
Potatoes	Traditional Baked	Single
Frittata	Grill to finish	Single
Casseroles		Single
Oven meals		Single

ROASTING

FOOD			SHELVES
Beef (Boneless)	Rare		Single*
	Medium		
	Well done		
Prime Rib Roast	Rare		Single*
	Medium		
	Well done		
Lamb leg (Bone in)	Medium		Single*
	Well done		
Lamb leg (Boneless)	Medium		Single*
	Well done		
Veal	Medium		Single*
	Well done		
Chicken (Whole)			Single*
Turkey (Whole)	With Stuffing		Single*
	Without Stuffing		
Pork (Boneless)	Medium		Single*
	Well done		
Pork Crackling	Crisp		
Venison	Brown in a frying pan first.	Rare	Single*
		Medium	

* If multiple shelves are required (eg roasting vegetables at the same time), use Fan Forced and shelf positions 3 & 5.

RECOMMENDED FUNCTION	SHELF POSITIONS (FULL OVENS)	SHELF POSITIONS (COMPACT OVENS)	TEMP (°C)	TIME (MINS)
Pastry Bake/Fan Bake	3	2	190-195	30-40
Pastry Bake/Fan Bake	3	2	190-195	30-40
Bake	4	2	175-180	55-65
Bake	1	2	225-250	15-20
Fan Bake	3	2	175-180	45-50
Pastry Bake/Fan Bake	2	2	180-200	30-40
Bake	3	2	175-190	40-50
Pastry Bake/Fan Bake	3	2	170-180	30-45
Vent Bake/Bake	3	1	170-190	55-70
Fan Forced	3	2	170-190	30-40

RECOMMENDED FUNCTION	SHELF POSITIONS (FULL OVENS)	SHELF POSITIONS (COMPACT OVENS)	TEMP (°C)	TIME (MINS)
Roast/ Bake	3	2	160-170	18-32 / 450g
Roast/Bake	3	2	160-170	25-40 / 450g
Roast/Bake	3	2	160-170	30-55 / 450g
Roast/Bake	3	2	160-170	15-30 / 450g
Roast/Bake	3	2	160-170	20-35 / 450g
Roast/Bake	3	2	160-170	25-40 / 450g
Roast/Bake	3	2	160-170	18-28 / 450
Roast/Bake	3	2	160-170	20-33 / 450g
Roast/Bake	3	2	160-170	20-35 / 450g
Roast/Bake	3	2	160-170	25-45 / 450g
Roast/Bake	3	2	160-170	20-40 / 450g
Roast/Bake	3	2	160-170	25-45 / 450g
Fan Grill	3	2	175-190	15-20 / 450G
Bake	1	1	165-175	17-22 / 450g
Bake	1	1	150-165	15-20 / 450g
Roast/Bake	3	2	170-175	25-40 / 450g
Roast/Bake	3	2	170-175	30-45 / 450g
Vent Bake/Bake	3	2	250	20
Fan Grill	4	1	225	7.5/ 2.5cm meat thickness
Fan Grill	4	1	225	9.5 / 2.5cm meat thickness

GRILLING

FOOD			SHELVES
Beef	Steak	Rare	Single
		Medium	Single
	Burgers		Single
	Meatballs		Single
Lamb	Chops	Medium	Single
		Well done	Single
Pork	Chops (well done)		Single
	Ham steak		Single
	Bacon		Single
Chicken	Boneless pieces		Single
Sausages			Single
Fish	Fillets		Single
	Whole		Single
Vegetables	Sliced		Single

RECOMMENDED FUNCTION	SHELF POSITIONS (FULL OVENS)	SHELF POSITIONS (COMPACT OVENS)	TEMP (°C)	TIME (MINS)
Grill	4	3	HI	8-10
Grill	4	3	HI	10-15
Grill	4	3	HI	12-15
Grill	4	3	HI	12-15
Grill	4	3	HI	15-20
Grill	4	3	HI	20-25
Grill	4	3	HI	15-20
Grill	4	3	HI	15-20
Grill	4	3	HI	4-7
Fan Grill	5	2	175-190	30-50
Grill	5	2	HI	10-15
Fan Grill	5	2	200-220	8-12
Fan Grill	5	2	200-220	15-20
Grill	4	3	HI	8-12

- You can set the oven to automatically turn on later, cook for a preset time (cooking time), then automatically turn off at a preset stop time. See the example and instructions below (steps 1 to 7).
- If you start cooking manually and only want the oven to turn off automatically after a set cooking time: simply set the cooking time following steps 1 to 3 below and selecting a function and temperature. The oven will automatically turn off when the cooking time is over.
- Alternatively you can simply set the time of day you wish to the oven to turn off. Follow steps 4 and 5. The oven will automatically turn off when the stop time is reached.
- You may have the timer on at the same time as automatic cooking.
- Note: the grill element will come on while the oven is heating up. Uncovered foods may be browned on top.

IMPORTANT!

Safe food handling: leave food in the oven for as short a time as possible before and after cooking or defrosting. This is to avoid contamination by organisms which may cause food poisoning. Take particular care during warmer weather.

Example: It is 11:05 a.m. You want your food to cook for 1 hour, and you would like it to be ready by lunchtime (12:30 p.m.)

① Check the clock shows the correct time of day.

② Touch the right scroll ▸ control twice. The cooking time indicator will come on.

③ Touch the select ✓ control to confirm. The display will flash.

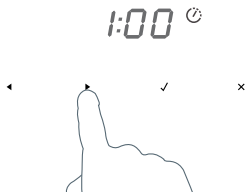

④ Touch the right scroll ▸ control to set the cooking time. Make sure you allow for preheat time in your calculation.

⑤ Touch the select ✓ control to confirm. The display will be steadily lit and the function dial halo will flash.

Set the stop time

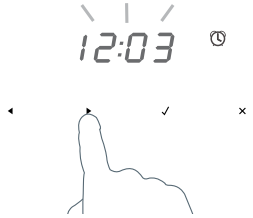

⑥ Touch the right scroll ▸ control to scroll to the stop time indicator.

⑦ Touch the select ✓ control to confirm. The display will flash.

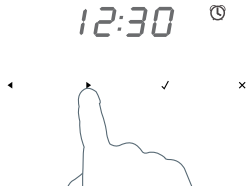

⑧ Touch the right scroll ▸ control to set the time you would like your food to be ready by (ie the stop time).

⑨ Touch the select ✓ control to confirm. The display will be steadily lit.

Select function and temperature

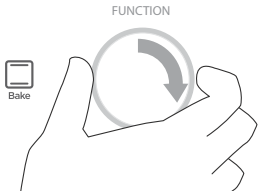

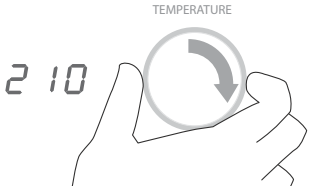

⑩ Select a function.
The function halo will stop flashing.

⑪ Adjust the temperature.

When automatic cooking is set

- The oven and the lights will stay off, the halos will be unlit, but your oven is now set for automatic cooking. It will automatically turn on at the required time.
- In a few seconds, the display will show the time of day with the cooking time and stop time indicators lit.
- Note: you can modify the function and temperature while the oven is waiting to start cooking.

When the stop time is reached

The oven will automatically turn off and a long tone will sound.

To check the set cooking time and stop time

Use the scroll ◀ ▶ controls.

To change the cooking or stop time

Use the right scroll ▶ control to scroll to the cooking time or the stop time , touch ✓ to select the one you want change and use the scroll ◀ ▶ controls to change the time. Touch ✓ to confirm.

To see the current time of day

Touch the cancel × control.

To cancel automatic cooking

Turn the function dial to Off .

You can set your oven to:

- display the temperature in degrees Celsius or Fahrenheit
- give audio feedback (tones and beeps) or operate quietly
- display time as 12-hr or 24-hr
- operate with the display off
- have its lights on or off during cooking
- operate in Sabbath setting (see 'Sabbath setting' following).

Note: You cannot change the user preference settings when you oven is operating or set for automatic cooking.

How to change preference settings

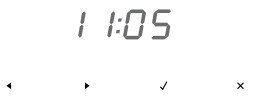

① Check the oven function dial is set to OFF and that the display shows the time of day.

- If you're unsure, touch the cancel × control twice.

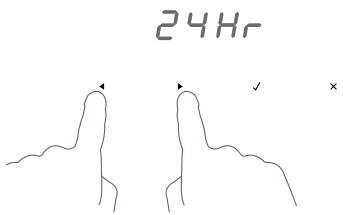

② Touch and hold the scroll ◂ ▸ controls together for 3 seconds to enter the user preference menu.

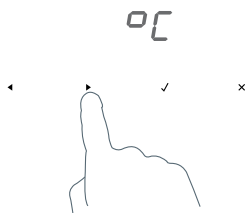

③ Touch the right scroll ▸ control to scroll to the setting you want to change. Refer to the following table.

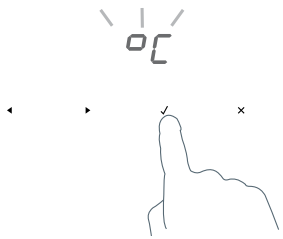

④ Touch the select ✓ control to select the particular setting.

- The display will flash.

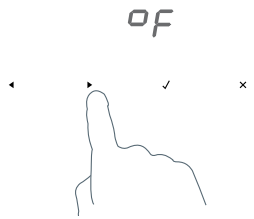

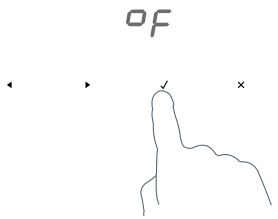

⑤ Touch the right scroll ▸ control to scroll through the options for that particular setting. Refer to the table below.

⑥ Touch the select ✓ control to save the new option .

⑦ For all options except 'Display off' : touch the cancel ✕ control to quit the user preference menu.

SETTING	DEFAULT OPTION	ALTERNATIVE OPTION(S)	
TIME SCALE & 'DISPLAY OFF' OPTION **Select between 24-hr or 12-hr clock display (and set the clock) or set 'Display off' option if you only need the basic functionalities of your oven.**	**24 HR** 24Hr	**12 HR** 12Hr	**DISPLAY OFF **** ***Available on some models only*** oFF
TEMPERATURE SCALE **Select between degrees Celsius or Fahrenheit.**	**CELSIUS** oC	**FAHRENHEIT** oF	
AUDIO FEEDBACK **Turn the beeps and tones on or off.***	**BEEPS/TONES ON** bPon	**BEEPS/TONES OFF** bPoF	
OVEN LIGHTS **Have the light off during cooking if you want to save power or want the food you cook to be a surprise for others.**	**LIGHTS ON DURING COOKING** Lton	**LIGHTS OFF DURING COOKING** LtoF	
SABBATH SETTING	**SABBATH OFF** SboF	See 'Sabbath setting' for instructions.	

* The timer tone and alert beeps will sound even if you save the BEEPS/TONES OFF option.
** With this option saved, you can still use the oven, and timer, however the display will remain unlit.
Any automatic functions will be cancelled when this option is selected.
To quit this option and enable the display, touch and hold the cancel ✕ control.

This setting is designed for religious faiths that observe a ‘no work’ requirement on the Sabbath.

While your oven is in Sabbath setting

- The display, dial halos and indicators will be unlit, the controls will be unresponsive.
- No tones or beeps will sound.
- No alert codes or temperature changes will be displayed.
- The oven lights will stay on. If you want the oven lights to be off during Sabbath setting, first select the ‘Lights off’ option as described in ‘User preference settings’, and only then set Sabbath setting.
- Bake is the only function available in Sabbath setting.

How to set Sabbath setting

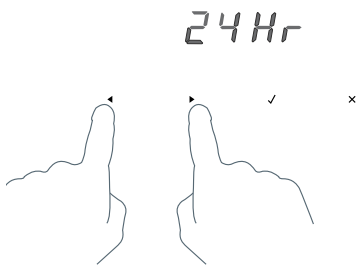

① Touch and hold the scroll ◀ ▶ controls together for 3 seconds to enter the user preference menu.

② Touch the right scroll ▶ control to scroll to the Sabbath setting.
③ Touch the select ✓ control to select the Sabbath setting. The default option is ‘Sabbath off’.

④ Touch the select ✓ control to activate the option.
- The display will flash 1:00.

⑤ Touch the scroll ◂ ▸ controls to set the time (hrs). You may set the time up to 99 hours.

⑥ Touch the select ✓ control to activate the option.

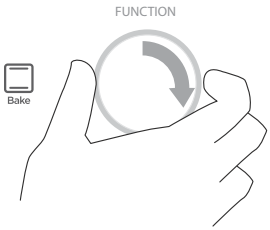

⑦ Select the Bake function.
⑧ Set the desired temperature.
⑨ Wait until the oven starts up.

The display, indicators and dial halos will be unlit and unresponsive, but the oven will bake until you quit Sabbath setting.

To quit Sabbath setting

Touch and hold the cancel × control until the time of day appears in the display and the oven turns off.

Manual cleaning

ALWAYS	NEVER
• Before any manual cleaning or maintenance, first wait for the oven to cool down to a safe temperature to touch, then turn its power supply off at the wall. • Read these cleaning instructions and the 'Safety and warnings' section before you start cleaning your oven. • To prevent soiling from becoming 'baked on' and stubborn, we recommend removing any easy-to-reach spills, food or grease stains from the oven cavity enamel after each use. • Always clean the inner glass pane before starting a Self Clean cycle (where available). Failure to do this will mean that residue will bake on and be impossible to remove. • Always remove oven shelves and side racks and nuts before starting a Self Clean cycle (where available).	• Never use a steam cleaner. • Never store flammable substances in the oven. • Never use abrasive or harsh cleaners, cloths, scouring pads or steel wool. Some nylon scourers may also scratch. Check the label first. • Never use oven cleaner on catalytic panels or in a pyrolytic oven. • Never leave alkaline (salty spills) or acidic substances (such as lemon juice or vinegar) on the oven surfaces. • Never use cleaning products with a chlorine or acidic base.

WHAT?	HOW?	IMPORTANT!
Glass surfaces **(oven door panes, control panel)**	Door comprises a total of 3 glass panes 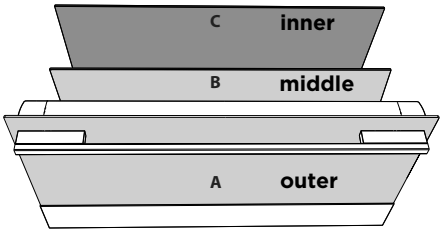 • To clean glass pane B, you will first need to remove the door and the inner pane. For instructions, see section 'Removing and replacing the door glass panes for cleaning'. ① Clean with a solution of soap and hot water. We recommend using a soap containing potassium hydroxide. Wearing gloves, dampen the soap bar and smear the soapy mixture on the door glass. Leave for 15 minutes then rinse with clean water and wipe dry. ② Wipe with a glass cleaner and dry with a soft, lint-free cloth.	• **Don't use oven cleaners or any other harsh/ abrasive cleaners, cloths, scouring pads, steel wool or sharp metal scrapers to clean the glass surfaces. These scratch the glass and may damage its special coating, which in turn could result in the glass cracking or shattering.** • **Even if you only clean the inner pane (C), remove the door and the pane first. Cleaning the glass with the pane in the door may result in cleaning liquid running down the gaps and drying onto internal components.** • **Take particular care when cleaning the control panel glass. Only use a damp cloth with detergent.**

Manual cleaning

WHAT?	HOW?	IMPORTANT!
Dials	Clean with a solution of mild detergent and hot water, then wipe dry.	**Do not use stainless steel or oven cleaner on the dials, as doing so may damage their coating.**
Stainless steel strip/handle on the front of the oven door	• Clean with a solution of mild detergent and hot water, then wipe dry with a microfibre cloth. • If necessary, use a suitable stainless steel cleaner and polish.	• **Always read the label to make sure that your stainless steel cleaner does not contain chlorine compounds as these are corrosive and may damage the appearance of your oven.** • **Always rub the stainless steel in the direction of the grain.**
Oven door frame and plastic corner clips	Clean with a solution of mild detergent and hot water, then wipe dry.	
Catalytic panels	To clean light soiling off the surfaces: ① Wipe with a damp cloth and a solution of hot water and mild detergent or an ammonia-based cleaner. ② Wipe dry with a soft cloth. • To clean stubborn, 'baked on' soiling, run the oven on Fan Grill at 200°C for 1.5 hours to enhance the catalytic panel cleaning function.	• **These panels are normally 'self-cleaning' because their special enamel breaks down greasy splatters when the oven is used for 'non-greasy' baking, especially at high temperatures.** • **Do not use oven cleaner on the catalytic panels. If you wish to use oven cleaner on any other part of the enamelled cavity, first remove the catalytic panels.** • **Do not immerse catalytic panels in water.** • **Never use scourers, brushes, abrasives or cleaners with acid or alkali content on the catalytic panels.**

Manual cleaning

WHAT?	HOW?	IMPORTANT!
Oven cavity **(models without 'Selfclean' function only)**	• Remove everything from the oven: all shelves and trays, the side racks (including fixing nuts) and catalytic panels. ① Remove the oven door (see instructions on following pages). ② Wipe the inside of the oven using a household detergents or an ammonia-based cleaner. ③ Wipe clean with a damp cloth and allow to dry completely.	• **To prevent soiling from becoming 'baked on' and stubborn, we recommend removing any easy-to-reach spills, food or grease stains from the enamelled surfaces after each use.** • **To make wiping out the oven easier you may remove and the oven door. See the following pages for instructions.** • **To make cleaning the oven ceiling easier, the grill element can be lowered. See following pages for instructions.**
Oven cavity **(models with 'Self Clean' function only)**	• To clean light soiling off the enamelled surfaces: ① Wipe with a damp cloth and a solution of hot water and mild detergent or an ammonia-based cleaner. ② Wipe dry with a soft cloth. • To clean stubborn, 'baked on' soiling or the whole oven cavity: use the Self Clean function. See 'Using the Self Clean function' for instructions.	• **To prevent soiling from becoming 'baked on' and stubborn, we recommend removing any easy -to-reach spills, food or grease stains from the enamelled surfaces after each use. Doing so will reduce the need for using the Self Clean function frequently.** • **Always remove the side racks and fixing nuts before a Self Clean cycle** • **To make wiping out the oven easier you may remove the oven door. See the following pages for instructions.**

Manual cleaning

WHAT?	HOW?	IMPORTANT!
Telescopic sliding shelf supports	Wipe with a damp cloth and mild detergent. Do not wipe off or wash away the white lubricating grease (visible when the slides are extended).	**Do not wash these in the dishwasher or immerse in soapy water. Do not use oven cleaner on them or leave in the oven during a Self Clean cycle (where available) as doing so will remove the white lubricating grease and prevent the slides from running smoothly.**
Grill tray **Grill rack** **Side racks** **Oven shelves** **Baking tray**	• Clean with a solution of mild detergent and hot water. • Pre-soak stubborn burnt-on stains in a solution of dishwasher powder and hot water.. • Except for the baking tray these parts are also dishwasher safe.	**Never leave any of these parts in the oven during a Self Clean cycle. They will become discoloured or damaged.**
Oven seal (models without 'Selfclean' function only)	Clean with a solution of mild detergent and hot water.	
Oven seal (models with 'Self Clean' function only)	Do not clean this part.	

Removing the side racks and catalytic panels (some models only)

IMPORTANT!

Always turn off the oven at the wall first. Ensure the oven has cooled down completely before starting.

Remove all shelves

① Slide out all shelves and remove.
For easier access we recommend removing the oven door. See 'Removing and refitting the oven door'.

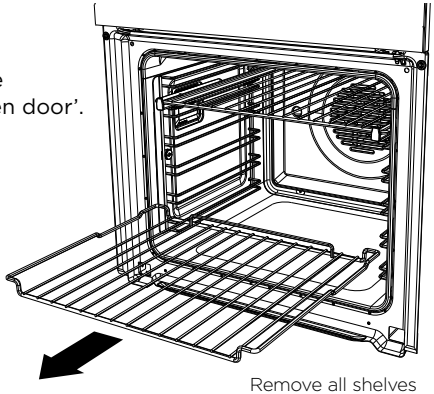

Remove all shelves

Remove both side racks (and catalytic panels if fitted):

① Unscrew and remove the fixing nut at the front of the side rack. Use a coin to loosen the nut if necessary.
② Pull the side rack toward the center of the oven until the front tab is clear of the fixing nut. If catalytic panels are fitted remove them at the same time (pull the panel toward the centre of the oven along with the side rack).
③ Slide the side rack (and catalytic panel if fitted) forward until the rear prongs are clear of the holes.
④ You may now slide the catalytic panel off the side rack rear prongs.

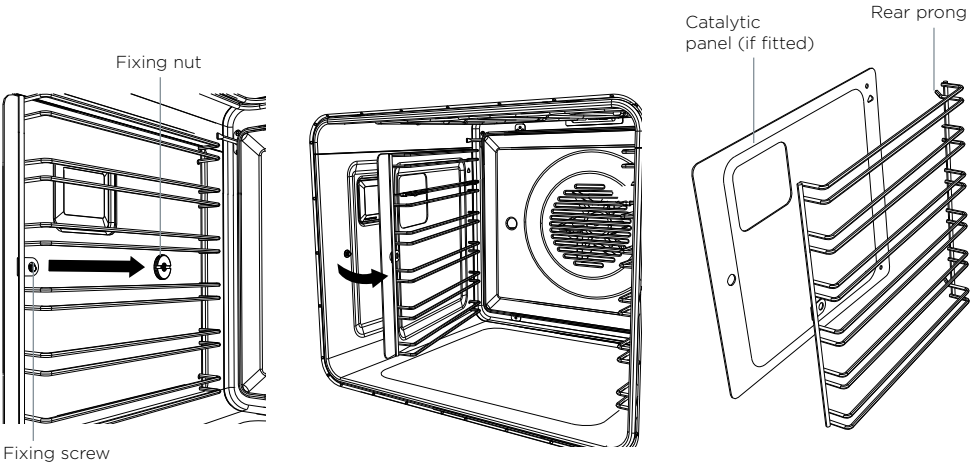

Refitting the side racks and catalytic panels (some models only, purchased separately)

Fit the catalytic panel to the side rack

① Ensure the panels are placed the correct way around:
in models with side lights: the cutout fits over the light and the hole for the fixing screw goes to the front of the oven.
in models with a ceiling light: the hole for the fixing screw goes to the front of the oven.
(Note: panels should sit flush against the oven wall).

② Fit the rear prongs of the side rack through the holes in the catalytic panel.

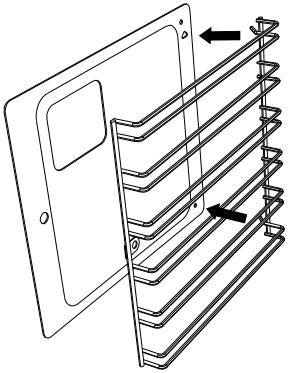

Replace the side racks

① Slide the rear prongs of the side rack into the holes at the rear of the oven
② Fit the side rack front tab (and catalytic panel if fitted) over the fixing screw.
③ Replace the fixing nut. You may use a coin to tighten the nut.

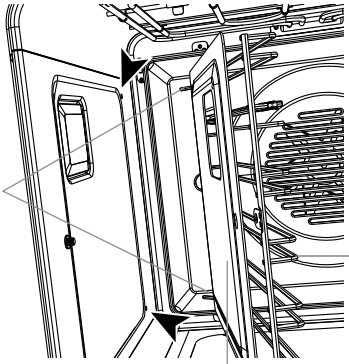

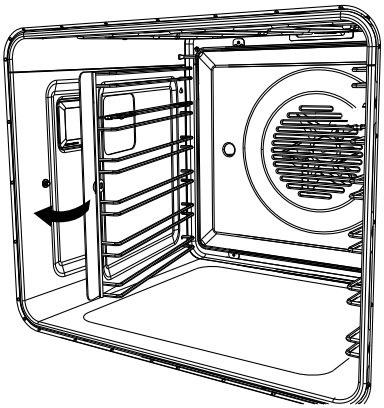

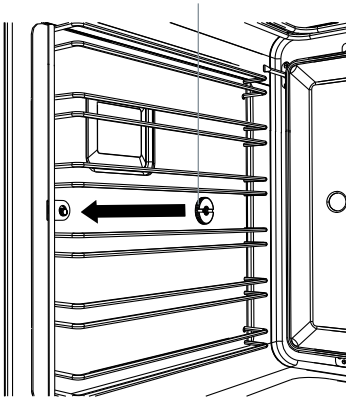

Fitting and removing the sliding shelf supports

IMPORTANT!

Compact ovens only:
The sliding shelf supports cannot be used on shelf positions 3 and 4.

To fit

1. Ensure the slides are the correct way around (the front of the slide has the triangular shaped tab as shown).
2. Fit the top of the clips over the side rack, the front clip should be fitted as close to the front of the side rack as possible. Make sure the rear clip has engaged.
3. Rotate the slide down and 'click' the bottom of the clips into place.

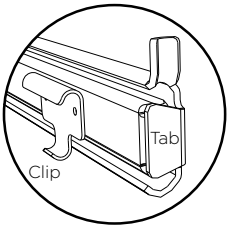

Front of Left Hand Slide

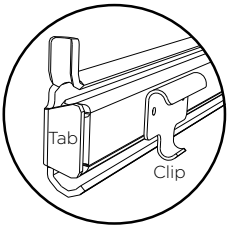

Front of Right Hand Slide

To remove

- Grasp the slide and rotate the bottom up to release the the clips and remove.

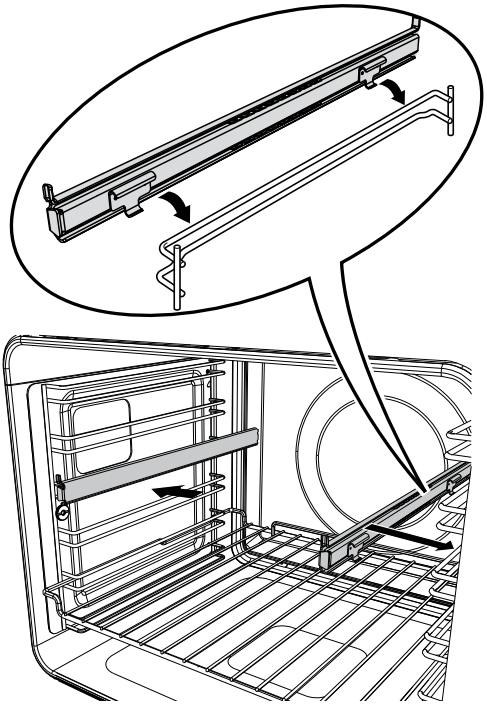

When refitting the sliding shelf supports, make sure that you fit:

- the side racks first
- the slides to the top wire of a shelf position (shelf positions 1 & 2 only in compact ovens)
- both sides of each pair of slides

Refit the oven shelves and grill pan

Slide in the shelves you need, making sure that:

- They slide between the two wires of a shelf position (unless a sliding shelf support is being use)
- The stop notches point down
- The guard rail is to the rear.

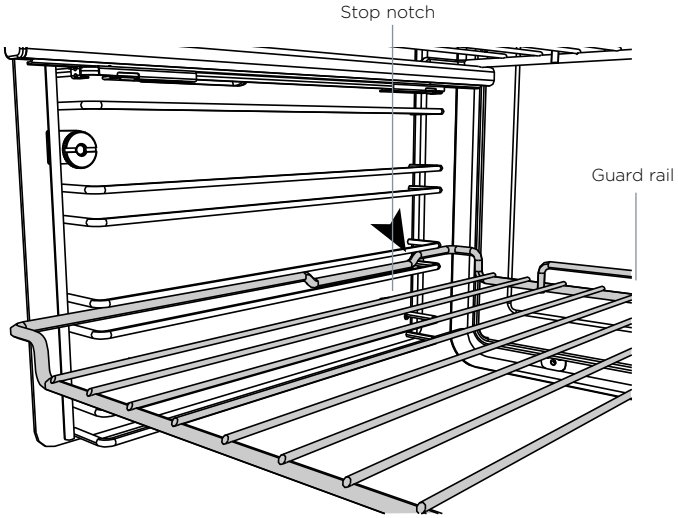

Refitting the shelf between two wires

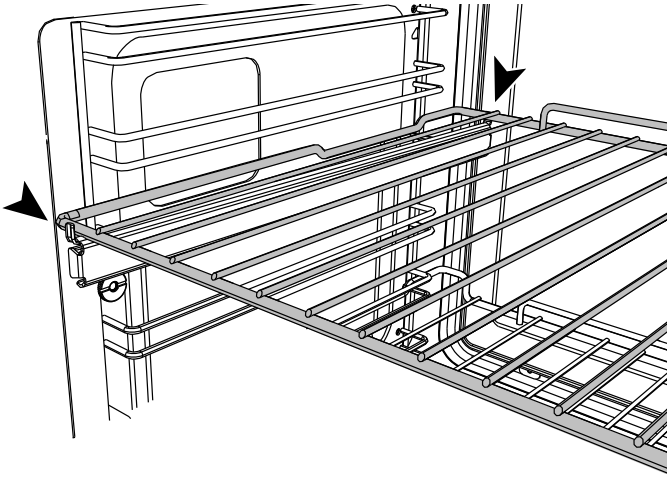

Refitting the shelf onto a sliding shelf support

Drop-down upper element (models without a Self clean function only)

IMPORTANT!

Always turn off the oven at the wall before lowering the upper element. Make sure the oven has cooled down completely before starting.

- To lower the upper element: Pull both the securing clips forward to release the element. The element will now drop down to enable cleaning.
- When you have finished cleaning the oven ceiling, pull the securing clips forward, raise the element and release the clips. Make sure the element is securely held in place.
- The element itself is self-cleaning.

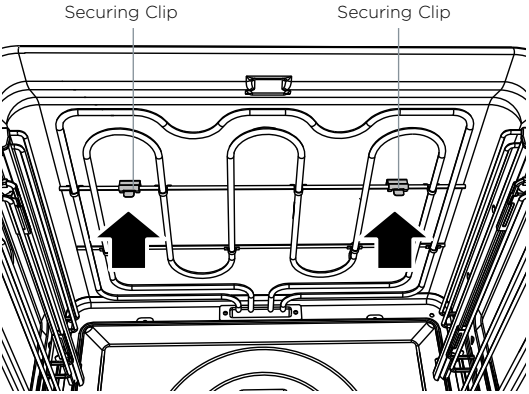

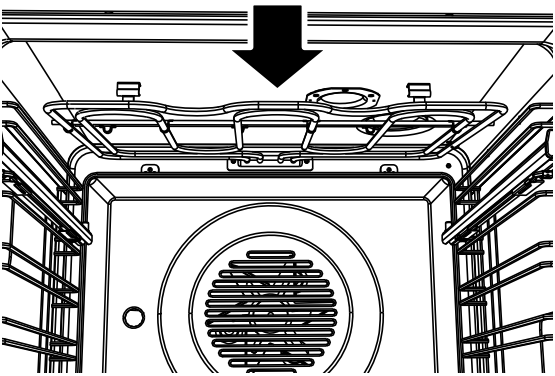

Drop down grill element

Replacing the oven light bulbs

Note: Oven bulb replacement is not covered by your warranty.

Your oven uses G9 halogen bulbs with the specifications 220-240V, 50Hz and 25W.

Always hold the replacement bulb in a soft cloth. Touching the bulb will reduce its life-span.
The two oven lights are located behind the opaque glass panels on each side wall of your oven (one on each side).

Changing the bulb

1. Let the oven cavity and grill element cool down before changing the bulb. Before switching off the oven, take note of which light(s) are not working.

IMPORTANT!

Turn the oven off at the wall before continuing.

2. Remove the oven shelves and side racks (see 'Care and cleaning').
   If fitted, remove catalytic panels.
3. Pull the glass cover off (if you find this difficult, you can gently prise the cover off using the handle of a spoon or similar in the notches between the glass panel and oven wall while holding the cover to ensure it does not fall).
4. Pull out the faulty bulb.
5. Holding the replacement bulb in a soft cloth or tissue (touching the bulb will reduce its life span) insert it into the socket.
6. Replace the glass cover pushing it firmly into place.
7. Replace the catalytic panels (if fitted), side racks and oven shelves .

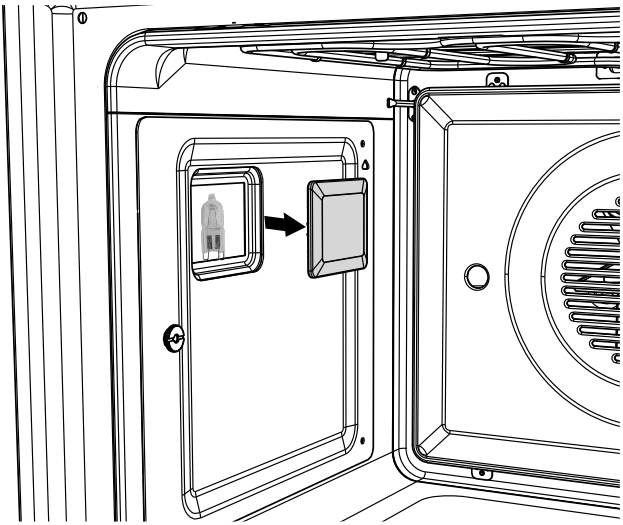

Removing and refitting the oven door.

IMPORTANT!

Take care, the oven door is heavy.

To remove the door

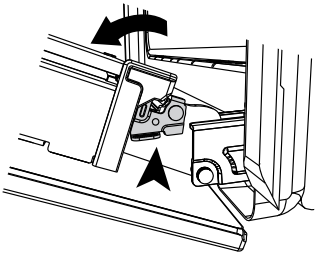

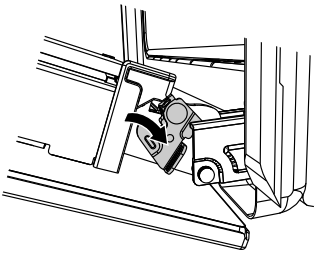

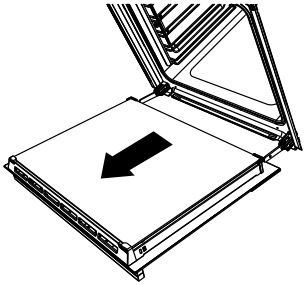

① Open the door fully. Locate the two small metal locking levers on both door hinges either side.

② Push each locking lever down fully to release the door from the hinge.

③ Holding the door on both sides, lift door back up to 45° and carefully pull the door out and away from the hinges.

To refit the door

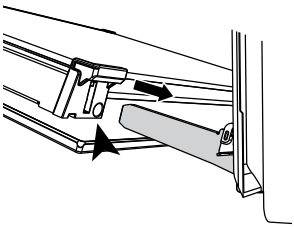

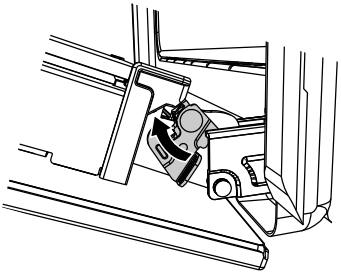

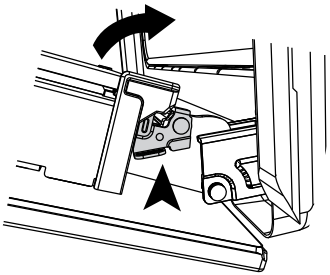

④ Holding the door on both sides, line up the holes in the base of the door with the hinges and slide the door on.

④ Once the door is fully located on the hinges, push each locking lever up fully to lock the door onto the hinge.

④ **IMPORTANT!**
Ensure the levers are both fully locked before trying to shut the door.

Removing the door glass panes for cleaning

IMPORTANT!

- **Make sure you follow the precautions and instructions below very carefully. Replacing the glass panes and the door incorrectly may result in damage to the oven and may void your warranty.**
- **Take care, the oven door is heavy. If you have any doubts, do not attempt to remove the door.**
- **Make sure the oven and all its parts have cooled down. Do not attempt to handle the parts of a hot oven.**
- **Take extreme care when handling the glass panes. Avoid the corners and edges of the glass bumping against any surface. This may result in the glass shattering.**
- **Don't use oven cleaners or any other harsh/abrasive cleaners, cloths, scouring pads, steel wool or sharp metal scrapers to clean the glass surfaces. These scratch the glass and may damage its special coating, which in turn could result in the glass cracking or shattering.**
- **If you notice any sign of damage on any of the glass panes (such as chipping or cracks), do not use the oven. Call your Authorised Repairer or Customer Care.**
- **Make sure you replace all the glass panes correctly. Do not use the oven without all glass panes correctly in place.**
- **If the glass panes feel difficult to remove or replace, do not force them. Call your Authorised Repairer or Customer Care for help.**

Note: service visits providing assistance with using or maintaining the oven are not covered by your warranty.

We recommend removing the door to make cleaning the glass easier. See 'Removing and refitting the oven door' for instructions. Once the door is removed, lay it down on a soft, clean, flat surface.

Make sure you follow the precautions and instructions below very carefully. Replacing the glass panes and the door incorrectly may result in damage to the oven and may void your warranty.

To remove the inner pane

① Touch the glass retainer tabs in on both sides of the door.
② Pull the glass retainer up until the tabs relocate in the topmost hole.
③ Holding the top of the inner pane, gently pull the pane toward the top of the door until the pane is clear of the notch at the bottom of the door and lift out. Do not angle the pane too much as you may damage the glass.

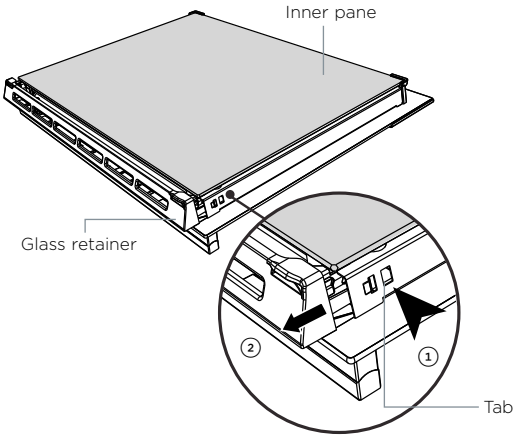

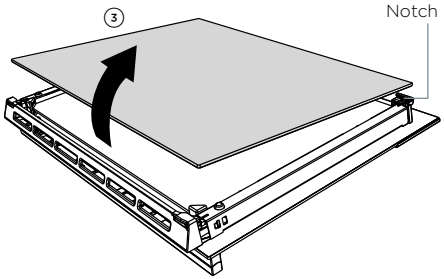

To remove the middle pane

④ Touch the glass retainer tabs in on both sides of the door again. The glass retainer can then be pulled off completely.
⑤ Gently pull the middle pane toward the top of the door until the pane is clear of the notch at the bottom of the door.
⑥ Lift the pane out. The rubber stoppers at the top of the pane remain attached to the glass pane.

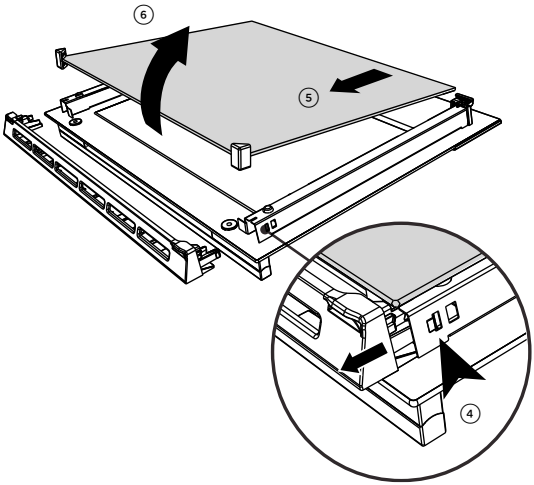

After cleaning replace the door glass panes

When replacing the glass panes make sure that

- you replace the inner pane correctly as shown. The pane must be in the position described below in order to fit into the door and to ensure that the oven operates safely and correctly
- you take extra care not to bump the edges of the glass against any object or surface you do not force any of the panes into place. If you are experiencing difficulties replacing the panes, remove them and start the process again from the beginning. If this still does not help, call Customer Care.

Replace the middle pane

Ensure the pane is the right way up (the black strip and warning text at the bottom of the pane should be readable back to front when the pane is fitted correctly).

① Ensure the rubber stoppers are still attached at the top to the pane.
② Slot the bottom of the pane into the lower notch at the bottom of the door.
③ Lower the pane into the door, the rubber stoppers rest on the outer pane of glass.

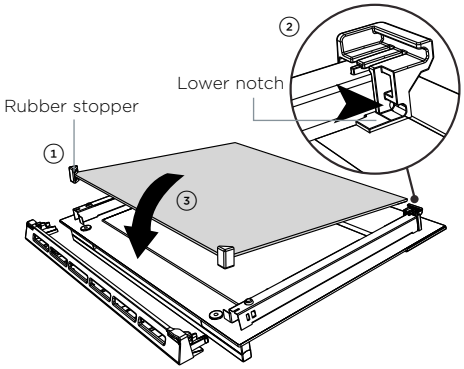

Replace the inner pane

Ensure the pane is the right way up (ie the logo should be readable at the bottom of the door)

④ Slide the pane into the notch at the bottom of the door.
⑤ Lower the pane onto the notch at the top of the door.
⑥ Slide the glass retainer back into place and ensure it is fully clipped securely in place.

IMPORTANT!

Make sure the glass retainer is correctly and firmly in place and the glass pane is secure.

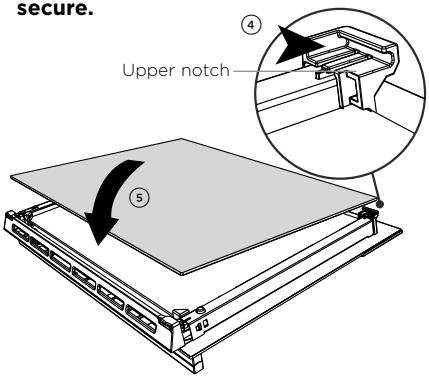

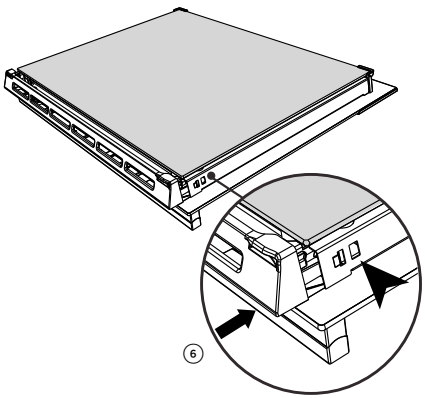

- During the pyrolytic Self Clean cycle the extremely high temperature burns off and breaks down grime and grease deposits. All that is left is a small amount of grey ash that you can easily remove.
- There is a choice of two Self Clean cycles:
  - **Self Clean** (minimum 4 hours) (for normal soiling).
  - **Light Self Clean** (minimum 3 hours) (suitable for a light or localised soiling).

IMPORTANT!

- **You must clean the inside glass door panel BEFORE starting a self-clean cycle. Failure to do this may result in permanent staining or marking of the door glass. See 'Care and cleaning' for our recommendations on how to do this.**
- **Do not use oven cleaners, any degreasing cleaners, or oven liners.**
- **Make sure you remove the side racks (including the fixing nuts), oven shelves and trays and all other bakeware and utensils from the oven before starting a Self Clean cycle. If left in the oven, they will become permanently discoloured or damaged; items made from combustible materials (eg wood, fabric, plastic) may even catch fire.**
- **Do not use your oven to clean miscellaneous parts.**
- **Make sure the room is well ventilated.**
- **Before starting a Self Clean cycle, make sure you move any pet birds to another, closed and well-ventilated room. Some pet birds are extremely sensitive to the fumes given off during a Self Clean cycle, and may die if left in the same room as the oven during such a cycle.**
- **During a Self Clean cycle, the oven reaches higher temperatures than it does for cooking. Under such conditions, the surfaces may get hotter than usual and children should be kept away.**
- **The oven door will be locked during the Self Clean cycle.**
- **If there are cracks or flaws on any of the oven door glass panes, if the oven seal is damaged or worn, or if the door does not close properly, do not start a Self Clean cycle. Call your Authorised Repairer or Customer Care.**

To start a Self Clean cycle

① Remove oven shelves, side racks and all other accessories, bakeware, and utensils.

② Wipe up any spills, and along the inner edge of the oven surface around the seal. Failure to do so may discolour the oven surface.

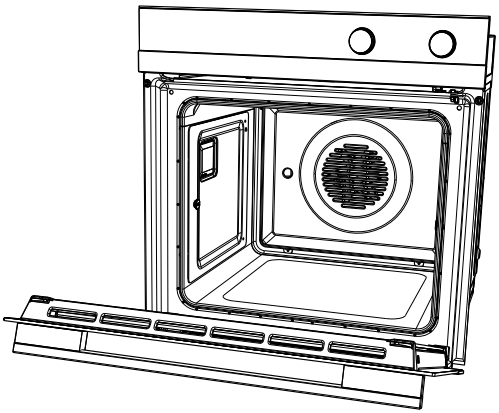

IMPORTANT!

Avoid cleaning the seal itself as this may cause damage.

③ Check the inner glass pane of the oven door (D). If it has soiling on it (eg stains from greasy splatter), you will need to clean it manually before starting a Self Clean cycle. For instructions, see 'Care and cleaning'.

IMPORTANT!

- **If soiling is left on the glass, it will become burnt on during the Self Clean cycle, making it very difficult to remove.**

④ Close the oven door firmly.

⑤ Select the Self Clean function.
- The display will flash 0:00

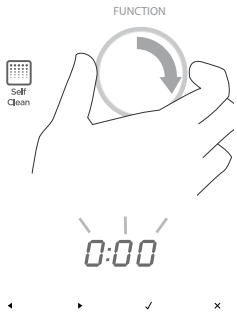

⑥ Touch the right scroll ▸ control once for the **Self Clean** cycle
- the display will flash 4:00 (4 hours), or
Touch the right scroll ▸ control a second time for the **Light Self Clean** cycle
- the display will flash 3:00 (3 hours)

- The temperature indicator will be blank, as temperature cannot be adjusted.

⑦ Touch the select ✓ control to start the Self Clean cycle.
- The time will start counting down.
- For your safety, the oven door will automatically lock and remain locked during the cycle.
- Note: if the select ✓ control is not touched within 15 seconds, the oven will automatically turn off. Start from step 3 again.
- The display will show DOOR if the door is not shut properly. See 'Troubleshooting'.
If the door is not shut properly within 30 seconds, the oven will automatically turn off.

During the Self Clean cycle

- the temperature and function halos will remain off.
- the Self Clean function will be lit.
- the display will countdown the time remaining.

When a Self Clean cycle has finished

The oven will:
- emit a long tone
- automatically turn off
- automatically unlock the door (when the oven has cooled to a safe temperature).

In a few seconds, the display will show the time of day.

You need to:
1. wait for the oven to cool down completely
2. remove the grey ash with a small brush or damp cloth
3. wipe out the oven with a clean damp cloth
4. dry with a clean lint-free cloth
5. replace the side racks and shelves.

To cancel a Self Clean cycle

IMPORTANT!

- **A Self Clean cycle can be cancelled at any time by touching the cancel × control.**
- **The door will not unlock until the oven has cooled to a safe temperature.**
  Do NOT turn off the mains power supply to the oven (wall switch). Turning off the power while the oven is too hot may damage the oven and its surrounding cabinetry.

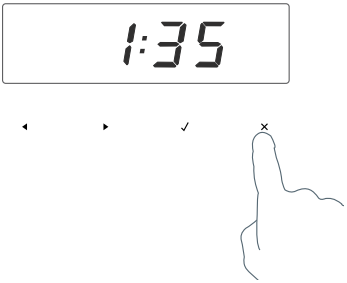

To cancel a Self Clean cycle, touch the cancel × control.

- If the oven needs to cool down, the Self Clean function indicator will stay lit, the display will show the remaining cool-down time, the temperature indicator will show cascading bars and the door will remain locked.
- When it has cooled down, the oven will turn off, the door will unlock, a long tone will sound and the display will show the time of day.
- We do not recommend cancelling a Self Clean cycle and then immediately starting one again.

Troubleshooting chart

If there is a problem, check the chart below to see if you can fix it. If the problem cannot be fixed or persists, call your Authorised Repairer or Customer Care.

PROBLEM	POSSIBLE CAUSES	WHAT TO DO
General		
The oven does not work.	No power.	Check that the mains power supply (wall switch) is turned on, the fuse has not tripped and there is no power outage in your area.
	The clock has not been set	The oven will not work unless the clock is set. See 'Setting the clock'.
The oven does not work but the display is lit.	The oven is set for automatic cooking.	See 'Automatic cooking' for instructions.
The lights do not come on when I open the oven door.	The oven light bulb(s) have blown.	Replace the light bulb(s). See 'Care and cleaning' for instructions.
	The door is not correctly fitted.	See 'Care and cleaning' for instructions on fitting the door correctly.
	The oven is in Sabbath setting and the 'Light off' option has been saved.	To quit Sabbath setting, touch and hold the cancel × control. See 'User preference settings' for instructions on changing the 'Light off' option.
The temperature indicator is blank and the dials and controls are unresponsive.	The control panel is locked.	Touch and hold the select ✓ or cancel × control to unlock the control panel.
The oven is not heating.	The door is not properly closed or it is opened too frequently during cooking.	The heating elements are disabled while the door is open. Make sure the door is properly closed and avoid opening it frequently during cooking.
A glass pane in the oven door has cracked, chipped, or shattered.	Incorrect cleaning or the edge of the glass hitting against something.	You must NOT use the oven. Call your Authorised Repairer or Customer Care.

PROBLEM	POSSIBLE CAUSES	WHAT TO DO
General		
I can feel hot air blowing out of the vents after I have turned the oven off.	This is normal.	For safety reasons the cooling fans will continue to run even when you have turned the function dial to 'Off'. The fans will switch off automatically when the oven has cooled.
The oven fan comes on when I select a function that does not use a fan (eg bake or classic bake)	This is normal. The fan comes on while the oven is preheating. It may turn off when the oven has reached the set temperature.	Wait until a long tone sounds and the temperature dial halo turns white: the oven will then be ready to use.
The oven has reached the set temperature but the temperature dial halo is still red (indicating that the oven is not ready to use).	This is normal: when heating up from cold, your oven is designed to initially heat to a temperature somewhat higher than what you have set. This is to provide optimal baking conditions right from the start.	Wait until a long tone sounds and the temperature dial halo turns white: the oven will then be ready to use.
The oven is heating but the display is dark.	The oven is set to 'Display off' option. The oven is in Sabbath setting.	To quit the 'Display off' option, touch and hold the cancel × control until the display shows the time of day. To quit Sabbath setting, touch and hold the cancel × control until the display shows the time of day.
The oven cancels automatic cooking when I try to adjust the clock setting.	The oven was set for automatic cooking when you were trying to adjust the clock setting.	You can only adjust the clock setting while the oven is not set for automatic cooking.
The oven sounds a tone when I try to turn the temperature dial OFF or below a certain temperature.	This is normal: for food safety reasons, the oven functions have factory-set minimum temperature settings.	The temperature dial itself cannot be 'turned off'. Selecting Off ⊙ with the function dial will turn the oven off.
The temperature dial halo never turns white when I use Grill ▭.	This is normal: the halo stays red to indicate that the grill element provides instant radiant heat.	

PROBLEM	POSSIBLE CAUSES	WHAT TO DO
General		
The displays work, and the function and temperature dials halos come on but the oven does not heat up.	The oven is in 'Demo' mode.	Call Customer Care.
The display shows DOOR	The door is open during cooking (some functions only).	Ensure the door is shut fully.

PROBLEM	POSSIBLE CAUSES	WHAT TO DO
Self Clean function (some models only)		
During a Self Clean cycle, the oven is louder than usual.	This is normal: the oven's cooling fans operate at their highest speed.	
The display shows DOOR.	The door has not been properly closed.	Make sure you close the door properly.
The display shows 0:00 but the oven door will not open.	The oven door is locked because the oven is still too hot to be used for cooking.	Wait until the Self Clean cycle has finished. If you cancelled a Self Clean cycle which was already underway, the oven still needs to cool down before it can be used. The oven door will automatically unlock.
At a point during a Self Clean cycle, the function dial halo goes out and the temperature indicator starts displaying cascading bars .	This is normal: the oven is in the last phase of the Self Clean cycle, cooling down.	Wait until the Self Clean cycle has finished. A long tone will sound and the oven door will automatically unlock when the oven is ready to use.

PROBLEM	POSSIBLE CAUSES	WHAT TO DO
Self Clean function (some models only)		
I have cancelled a Self Clean cycle but cannot use the oven: • the oven door will not open • the display is still counting down minutes or showing 0:00 • the Self Clean function indicator is still lit the temperature indicator shows cascading bars • the dials and controls are unresponsive.	This is normal: if the function dial halo is unlit, you have successfully cancelled the Self Clean cycle. However, the oven is still too hot to be used for cooking and needs to cool down.	Wait until the cool-down phase has finished. A long tone will sound and the oven door will automatically unlock when the oven is ready to use. Note: depending on when the Self Clean cycle was cancelled, the cool-down phase may take up to 45 minutes.
The oven is beeping and the display shows A2 or A3.	See section 'Alert codes' for instructions.	
There is a power cut during a Self Clean cycle.	Power cut.	The door will remain locked. Once the power is turned back on, the door will remain locked until the oven has cooled to a safe temperature.

If there is a problem, the oven will:

- automatically suspend all oven functions
- beep five times
- display an alert code.

IMPORTANT!

Do not turn off the mains power supply to the oven (wall switch) if you get an alert code, unless the instructions in the chart following specifically instruct you to. There are cooling fans within the oven which are needed to cool the oven's components. Turning off the power while the oven is too hot may damage the oven and its surrounding cabinetry.

What to do if an alert code is displayed

1. If the beeping hasn't stopped already, touch any control to stop it.
2. Make a note of the alert code displayed. You may need this information.
3. Check the chart following to see if you can fix the problem yourself and follow the instructions.
4. If you can fix the problem and the alert code does not reappear, you can keep using your oven.

OR

If you can't fix the problem yourself or the alert code reappears and the problem persists: wait until the cooling fans have stopped and the oven has completely cooled down, then turn the power to the oven off at the wall and call your Authorised Repairer or Customer Care with the alert code information.

ALERT CODES

ALERT CODE	POSSIBLE CAUSES	WHAT TO DO
A 1	The oven has overheated.	① Allow the oven to cool down. ② Once the oven has cooled down and the door has unlocked, the alert code will disappear. You can now use the oven again.
A2	Door lock error: the door cannot be locked after you have started a Self Clean cycle.	① Turn the power to the oven off at the wall and on again. ② Wait approximately 10 seconds. This is to allow the door lock to return to its initial position. ③ Set the clock. See 'Setting the clock and first use' for instructions. ④ Try starting a Self Clean cycle again, making sure that you close the door firmly. See 'Using the Self Clean function'.
A3	Door lock error: the door cannot be unlocked after a Self Clean cycle has finished.	① Turn the power to the oven off at the wall and on again. ② Try touching on the oven door to help the door lock disengage. ③ If this doesn't help and the alert code reappears, call your Authorised Repairer or Customer Care.
F + number	Technical fault.	① Note down the alert code. ② Wait until the cooling fans have stopped and the oven has completely cooled down. ③ Turn the power to the oven off at the wall. ④ Call your Authorised Repairer or Customer Care with the alert code information.

Before you call for service or assistance ...

Check the things you can do yourself. Refer to the installation instructions and your user guide and check that:

1. Your product is correctly installed.
2. You are familiar with its normal operation.

If after checking these points you still need assistance or parts, please refer to the Service & Warranty book for warranty details and your nearest Authorised Service Centre, Customer Care, or contact us through our website www.fisherpaykel.com.

Complete and keep for safe reference:

Model _____

Serial No. _____

Purchase Date _____

Purchaser _____

Dealer _____

Suburb _____

Town _____

Country _____

This oven has been designed and constructed in accordance with the following codes and specifications:

In New Zealand and Australia

- AS/NZS 60335-1 General Requirements for Domestic electrical appliances
- AS/NZS 60335-2-6 Particular Requirements for Domestic electrical cooking appliances
- AS/NZS CISPR 14.1 2010 Electromagnetic Compatibility Requirements.

In Europe

- Safety requirements of EEC Directive “Low voltage” 2006/95:
  EN 60335-1 General Requirements for Domestic electrical appliances
  EN 60335-2-6 Particular Requirements for Domestic electrical cooking appliances
- Safety requirements of EEC Directive “EMC” 89/336:
  EN 55014-1, EN 55014-2, EN 61000-3-2, EN 61000-3-3 Electromagnetic Compatibility Requirements.

Requirements of EEC Directive 93/68.

European directive 2002/96/EC on Waste Electrical and Electronic Equipment (WEEE) (for European Union countries only)
GB This appliance is marked according to the European directive 2002/96/EC on Waste Electrical and Electronic Equipment (WEEE). By ensuring this product is disposed of correctly, you will help prevent potential negative consequences for the environment and human health, which could otherwise be caused by inappropriate waste handling of this product.
The symbol on the product, or on the documents accompanying the product, indicates that this appliance may not be treated as household waste. Instead it shall be handed over to the applicable collection point for the recycling of electrical and electronic equipment. Disposal must be carried out in accordance with local environmental regulations for waste disposal. For more detailed information about treatment, recovery and recycling of this product, please contact your local city office, your household waste disposal service or the shop where you purchased the product.

ENERGY GUIDELINES (GB IE ONLY)

MODEL	WEIGHT (KG)	NO. OVEN CAVITIES	CAVITY VOLUME (LITRES)	ENERGY CONSUMPTION* (CONVENTIONAL) KWH/CYCLE	ENERGY CONSUMPTION* (FAN FORCED) KWH/CYCLE	ENERGY EFFICIENCY INDEX (CONVENTIONAL)	ENERGY EFFICIENCY INDEX (FAN FORCED)
OB60SC9DEPX1	34	1	72	0.81	0.78	95.0	91.5
OB60SC9DEX1	34	1	72	0.84	0.78	98.5	91.5
OB60SC7CEPX1	34	1	72	0.81	0.78	95.0	91.5
OB60SC11DEPX1	34	1	72	0.81	0.78	95.0	91.5

*Energy consumption for electric cooking appliances are calculated using the following Standard:
BS EN 50304 & BS EN 60350 – Electric cooking ranges, hobs, ovens and grills for household use - Methods for measuring performance

Reducing the environmental impact

Reducing energy consumption will reduce the impact of cooking on the environment. The following tips can help you to reduce your energy consumption:

- Do not pre-heat the oven too early. Aim to have the oven hot at the same time as the foodis ready to be placed in it.
- Maximise the use of your pre-heated oven – cook or bake in batches.
- Minimise the number of times you open the oven door during cooking (to reduce heat loss).
- Cook multiple dishes at the same time.
- Use the residual heat in the oven to finish the cooking process (turn the oven off a few minutes before the cooking time is up).
- Use ceramic or glass cooking dishes which may reduce the cooking time or allow you to reduce the oven temperature.
- Use fan functions wherever possible. These functions may allow you to reduce cooking times and/or temperatures. Fan forced functions will allow you to bake on multiple shelves at the same time.
- Use a ‘Self clean’ function immediately after cooking when the oven is still warm, shortening the heat up period of the Self clean cycle.
- Replace oven seals if they become damaged. A damaged seal will decrease the efficiency of your oven.
- Cutting food into smaller pieces will reduce cooking time.
- Do not use the oven to defrost food.

www.fisherpaykel.com

Copyright © Fisher & Paykel Appliances 2016. All rights reserved.
The product specifications in this booklet apply to the specific products and models described at the date of issue. Under our policy of continuous product improvement, these specifications may change at any time. You should therefore check with your Dealer to ensure this booklet correctly describes the product currently available.

NZ AU GB IE HK SG

590766 B 11.16