Series 9 Integrated Double DishDrawer Dishwasher, Sanitise

Integrated

Integrating into your kitchen design seamlessly, each drawer fits a half load that you can load and wash independently.

- Knock to pause function is perfect if you miss a dish
- Six wash programs, as well as additional Quick wash, Sanitise and Extra Dry options
- Flexible racking can be folded down to fit bigger dishes
- Customise with your own front panel and handle to match your kitchen cabinetry, or choose our stainless steel panel
- Wi-Fi connected for remote control and helpful alerts using the Haier Smart Home app

DIMENSIONS

Height	820 - 880 mm
Width	599 mm
Depth	553 mm

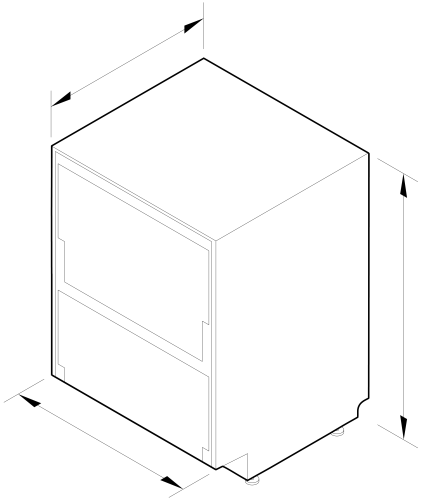

FEATURES & BENEFITS

Ease of Use

DishDrawer™ Dishwashers are as easy to open and close as kitchen drawers and can be conveniently positioned at bench height for ease of loading and minimal bending.

Quick, Sanitise and Extra Dry options

The Quick wash modifier delivers a faster wash while maintaining performance. The Sanitise option provides extra protection, killing 99.9% of bacteria* in the final rinse. The Extra Dry setting is perfect for plastic dishes. *Certified to NSF/ANSI Standard 184

Knock to Pause

Instead of needing a remote control, these DishDrawer™ Dishwashers have a knock to pause function. A knock on the front panel will pause the dishwasher which can be re-started again by using the start/play button.

Quiet performer

Running at a very low decibel rate, these DishDrawer™ Dishwashers do their job without making a fuss. The combination of intelligent technology and simple mechanics means greater reliability and excellent wash performance.

Control from anywhere

Get the most out of your connected appliance with the Haier Smart Home app. Connect and monitor your smart DishDrawer™ Dishwasher while conveniently accessing the latest tips, remote status notifications, and more.

True Half Load

Each drawer holds a true half load for guilt-free small washes and fast turnaround of your dishes. Both drawers operate independently so different wash cycles can run simultaneously to accommodate a variety of loads.

SPECIFICATIONS

Accessories (included)

Cutlery basket	•
Kickstrip	true
Knife clip and multipurpose clip	•

Accessories (sold separately)

Door panel black stainless steel	ADDD60DPB
Door panel stainless steel	ADDD60DPX
Handle kit Contemporary round, aluminium	AHS-OBDD-60S
Handle kit Contemporary square fine, aluminium	AHD5DDDW60S
Handle kit Contemporary square fine, black	AHD5DDDW60B
Handle kit Contemporary square, aluminium	AHD3-OBDD-60S

Handle kit Contemporary square, black	AHD3-OBDD-60B

Capacity and loading

Accommodates round plates up to	280mm
Adjustable height, foldable cupracks	•
Fold down tines	•
Pitch adjustable tines	•
Place settings	16
Place settings per drawer	8

Connected Features

Alerts and notifications	•
Education and onboarding	•
Monitoring	•
Software updates	•

Consumption

Cleaning Index	1.16
Drying Index	0.97
Energy consumption	0.61kWh/cycle per drawer
Energy rating	Grade 3
Water consumption	8L per drawer

Controls

Electronic fault/Diagnostic indicator	•
End of cycle beeps	•
Energy saving delay start option of up to 12 hours	•
Internal wash selector	•
Keylock	•
Knock to pause	•
Rinse aid indicator light	•
Smart appliance	•

Features

Built-in water softener	•
Fan assisted drying	•
Flood protection	•
Flow through detergent dispenser	•
Motor type	BLDC
Quiet operation	•
SmartDrive™ technology	•
Three-stage filtration system	•

Performance

Noise on standard cycle top drawer	43 dBA

Power requirements

Dedicated Circuit (A)	10A
Supply frequency	50 Hz
Voltage	220 - 240V

Product dimensions

Depth	553 mm
Height	820 - 880 mm
Width	599 mm

Wash Program Modifiers

Extra Dry	•
Quick	•
Sanitise	•
Wash modifiers	3

Wash Programs

Delicate	•
Eco	•
Fast	•
Heavy	•
Medium	•
Rinse	•
Wash programs	6

Water connection

Water pressure	100kPa - 1000kPa
Water supply	3/4" BSP (20mm) Connector Water Inlet Hose

SKU	84245

The product dimensions and specifications in this page apply to the specific product and model. Under our policy of continuous improvement, these dimensions and specifications may change at any time. You should therefore check with Fisher & Paykel's Customer Care Centre to ensure this page correctly describes the model currently available. © Fisher & Paykel Appliances Ltd 2020

Other product downloads available at fisherpaykel.com

- DXF
- DWG
- Installation Guide (English)

- Installation Guide (English)
- Installation Guide (Chinese)
- Planning Guide (English)
- Planning Guide (Chinese)
- Revit
- Rhino
- Restriction of the Use of Hazardous Substances (Chinese)
- SketchUp
- User Guide (English)
- User Guide (Chinese)
- Water Efficiency Label

Where applicable:

All appliances use energy, and energy usage typically generates carbon emissions. Fisher & Paykel Appliances' In-use Energy Carbon Emissions Estimate indicates carbon emissions from a product's in-use energy. This is calculated either annually or per cycle, using the product's market-specific energy label energy consumption data multiplied by the carbon emissions factor for energy in your country or region.

Our In-use Energy Carbon Emissions Estimate is designed to assist customers in making informed purchasing decisions when comparing different Fisher & Paykel products. For example, a heat pump dryer typically has a lower In-use Energy Carbon Emissions Estimate than a vented dryer.