569L Series 7 French Door Refrigerator Freezer, Ice & Water

Series 7 | Contemporary

Stainless Steel | French hinge



With its large capacity you'll have plenty of flexible storage space in this French Door Refrigerator in stylish stainless steel.

- ActiveSmart technology to help keep food fresher for longer by stopping temperature fluctuation
- Door water dispenser and internal ice maker
- Spacious bottom freezer with full extension drawer gives easy access to frozen goods.

DIMENSIONS

Height	1790 mm
Width	900 mm
Depth	695 mm

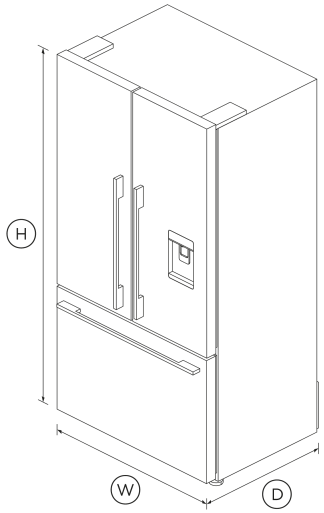

FEATURES & BENEFITS

Humidity Control

Your fruit and veges need different environments. The humidity control slides in each storage bin create a microclimate that helps keep food fresher for longer.

Ice Maker

Fresh ice is always available for you in a dedicated freezer bin. Simply turn it off to free up freezer space, or during busy times you can boost ice production by up to 30%.

Design Quality

Our fridges are designed and built using quality materials. We use real stainless steel on our fridges and solid glass for shelving.

Simple Storage

This refrigerator is designed to make it simple for you to store, access and remove food. Storage bins give you full access inside when they're pulled open and can be easily removed to clean. Our flexible shelving also gives you more storage options.

Water On Tap

The slimline dispenser makes it easy to fill almost any sized jug or vessel with cool filtered water and doesn't take up any storage space in your refrigerator. You'll need to purchase our stainless steel door panel in order to use the water dispenser.

Complementary Design

With their premium handle styling and stainless steel finish, our fridges are designed to match the rest of Fisher & Paykel's kitchen appliance family.

SPECIFICATIONS

Capacity

Total gross capacity	614 L
Total net volume	536L
Volume freezer	152 L
Volume refrigerator	417 L

Consumption

Energy rating	Grade 3
Energy usage	1.34kWh/24h

Features

Adjustable glass shelves	2
Adjustable half width door shelves	4
Covered door shelves	2
Door alarm	•
Front levelling feet	•

Full extension runners	•
Full width door shelves	2
LED lighting	•
Rear rollers	•
Single bottle holders	4
SmartTouch control panel	•
Ultra slim water dispenser	•

Freezer Features

Automatic ice maker	•
Bottle chill	•
Fast freeze	•
Freezer bins	3
Ice bin and scoop	•
Ice Boost	•

Performance

ActiveSmart™ Foodcare	•
Adaptive defrost	•
Frost free freezer	•
Humidity control system	•
R600a refrigerant	•

Power requirements

Connection power	240W
Rated current	10 A
Supply frequency	50 Hz
Supply voltage	220-240 V

Product dimensions

Depth	695 mm
Depth (including handles)	730 mm
Height	1790 mm
Minimum air clearance - at rear	30 mm
Minimum air clearance - each side	20 mm
Minimum air clearance - on top	50 mm
Width	900 mm

SKU 25488

The product dimensions and specifications in this page apply to the specific product and model. Under our policy of continuous improvement, these dimensions and specifications may change at any time. You should therefore check with Fisher & Paykel's Customer Care Centre to ensure this page correctly describes the model currently available. © Fisher & Paykel Appliances Ltd 2020

Other product downloads available at fisherpaykel.com

- DXF
- DWG
- Energy Label
- Energy Label
- Installation Guide (Chinese)
- Installation Guide (English)
- Installation Guide (Chinese)
- Revit
- Revit
- Rhino
- Restriction of the Use of Hazardous Substances (Chinese)
- SketchUp
- User Guide (Chinese)
- User Guide (English)
- Installation & User Guide (English)

Where applicable:

All appliances use energy, and energy usage typically generates carbon emissions. **Fisher & Paykel Appliances' In-use Energy Carbon Emissions Estimate** indicates carbon emissions from a product's in-use energy. This is calculated either annually or per cycle, using the product's market-specific energy label energy consumption data multiplied by the carbon emissions factor for energy in your country or region.

Our In-use Energy Carbon Emissions Estimate is designed to assist customers in making informed purchasing decisions when comparing different Fisher & Paykel products. For example, a heat pump dryer typically has a lower In-use Energy Carbon Emissions Estimate than a vented dryer.