FISHER & PAYKEL

INTEGRATED RANGEHOOD

HPB6028-1, HPB7528-1, HPB7548-1, HPB9028-1, HPB9048-1,
HPB9048-2 & HPB12048-2 models

USER GUIDE
NZ AU ROW

CONTENTS

Introduction	3
Safety and warnings	4
Special features	6
For best performance	7
Operating instructions	8
Cleaning and maintenance	12
Troubleshooting	15
Parts and accessories	16
Service and warranty	17

IMPORTANT!

SAVE THIS GUIDE

The models shown in this user guide may not be available in all markets and are subject to change at any time. For current details about model and specification availability in your country, please go to our website fisherpaykel.com or contact your local Fisher & Paykel dealer.

Registration

Register your product with us so we can provide you with the best service possible.

To register your product visit our website: fisherpaykel.com

INTRODUCTION

Welcome to the family of Fisher & Paykel appliances. Our team has spent thousands of hours designing, engineering and testing this Integrated Rangehood to ensure you get the perfect product for your home. For more information on your product please visit fisherpaykel.com or contact our Customer Care team.

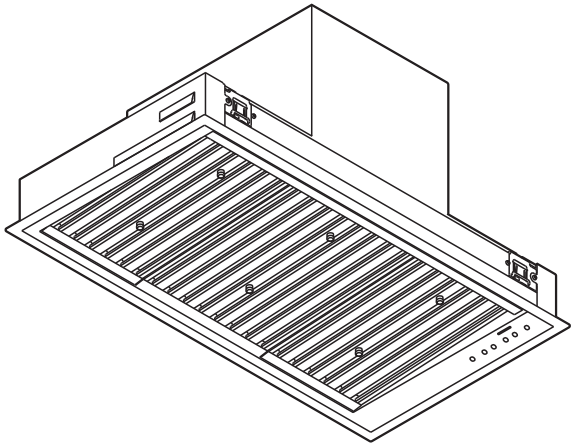

⚠ WARNING!

Weight Hazard

The appliance is heavy. Please ensure adequate care is taken when installing the appliance to prevent personal injury.

Weight of the products are:

HPB6028-1 = 14 kg

HPB7528-1 = 17 kg

HPB7548-1 = 21 kg

HPB9028-1 = 19 kg

HPB9048-1 = 23 kg

HPB9048-2 = 31 kg

HPB12048-2 = 35 kg

⚠ WARNING!

Electric Shock Hazard

Always disconnect the appliance from the mains power supply before carrying out any maintenance or repairs.

Installation work and electrical wiring must be done by qualified person(s) in accordance with all applicable codes and standards, including fire-rated construction.

Failure to do so can result in death, electric shock, fire or injury to persons.

IMPORTANT SAFETY INSTRUCTIONS

READ THE ENTIRE SET OF INSTRUCTIONS BEFORE INSTALLING OR USING THIS APPLIANCE. A copy of the user guide and installation guide for this product can also be found at fisherpaykel.com.

⚠ WARNING:
When using this appliance always exercise basic safety precautions including the following:

- **Please read the entire set of instructions before installing or using this appliance.**
- **Please make this information available to the person installing the appliance – doing so could reduce your installation costs.**
- **Always switch the power off prior to installation, servicing or cleaning of the appliance.**
- **There shall be adequate ventilation of the room when the rangehood is used at the same time as appliances burning gas or other fuels.**
- **This appliance is not intended for use by persons (including children) with reduced physical, sensory or mental capabilities, or lack of experience and knowledge, unless they have been given supervision or instruction concerning the use of the appliance by a person responsible for their safety.**
- **Children should be supervised to ensure they do not play with the appliance. Cleaning and user maintenance shall not be made by children without supervision.**
- **You must read the details concerning the method and frequency of cleaning.**
- **There is a fire risk if cleaning is not carried out in accordance with the instructions.**
- **Never leave frying food unattended since grease can overheat and catch fire. The risk of fire is even greater in the case of used oil.**
- **Do not flambé under the rangehood.**
- **Never use the rangehood without the filters in place.**
- **During an electrostatic discharge (ESD) it is possible that the device will stop working. By switching the device off and on the device will again work as intended.**
- **CAUTION: accessible parts may become hot when used with cooking appliances.**
- **Remove all packaging, including protective wrappings, before use.**

⚠ WARNING:
Chemical Burn Hazard. Keep batteries away from children.
This product contains a lithium button/coin cell battery. If a new or used lithium button/coin cell battery is swallowed or enters the body, it can cause severe internal burns and can lead to death in as little as 2 hours. Always completely secure the battery compartment. If the battery compartment does not close securely, stop using the product, remove the batteries, and keep it away from children. If you think batteries might have been swallowed or placed inside any part of the body, seek immediate medical attention. Even used cell batteries may cause injury so ensure they are kept away from children and disposed of properly.

READ AND SAVE THESE INSTRUCTIONS

Remote control

Selected models have a remote control provided with the rangehood. This remote can also be purchased as an optional accessory for other models of this rangehood. The remote is designed to make your rangehood easier to use. It allows you to adjust the fan speed and brightness of lighting without touching the rangehood.

Clean filter reminder

The clean filter reminder light will illuminate to remind you to clean the filters. Refer to the 'Cleaning and maintenance' section of this user guide for details of how to clean your filters.

Delayed shut off

This feature allows you to delay the shut off on the rangehood for up to 25 minutes. This enables you to continue to remove steam and cooking odours after cooking is complete.

Heat guard

When excessive heat is detected in the cooking area, a sensor will automatically turn the fan on at speed 5 and illuminate both fan speed buttons on the control panel. Once the heat decreases the fan speed will gradually reduce and return to the original fan speed selected.

This rangehood should be turned on for a few minutes before cooking in order to establish air currents upward through the rangehood. This will also enable hot air removal from your kitchen and keep the rangehood surface cool. When heat, smoke, moisture, grease and cooking odours are produced, they will be carried outside instead of drifting into other rooms.

Use the low fan speeds for normal use and the higher fan speeds for high heat, strong odours or fumes.

Rangehood width

- The rangehood width is recommended to be no less than the width of the cooktop.
- A wider rangehood can be used to increase the capture area if space is not restricted.
- The rangehood should ideally be centred above the cooktop for proper performance.

Induction cooking considerations

Induction cooktops use energy efficient technology that only heats the contents of a cooking pot. Unlike gas or traditional electric cooktops, the surrounding air does not get heated when using an induction cooktop. As a result, rangehood filters, splashbacks and surrounding cabinetry do not get warmed up, increasing the likelihood of condensation on these cooler surfaces. Other factors like ambient temperature, humidity, natural ventilation of the room, size of the cookware and how the induction cooktop is being used also influence condensation.
For example, rapid boiling on high cooktop heat settings like PowerBoost increases the rate at which water is evaporated, increasing the likelihood of condensation. It is important to understand that neither the rangehood nor the induction cooktop are faulty as a result of this phenomenon.

Condensation can be minimised by:

- Installing the rangehood at the maximum height above the cooktop.
- Using the rangehood on a lower speed setting when boiling.
- Using the induction cooktop on a lower heat setting when boiling.
- Switching the rangehood on 5 minutes before cooking and letting it run for at least 5 minutes after cooking. Refer to the ‘Delayed shut off’ section for details on how to use the timed shut off feature of this rangehood.

Gas cooking considerations

Using a powerful gas cooktop or multiple gas burners operating at the same time can cause the rangehood surfaces to become hot. This effect can be reduced by:

- Using the maximum speed setting to enable hot air to be extracted quickly.
- Installing the rangehood at the maximum recommended height. Consult the cooktop installation and user guide for details on the installation height of the rangehood.

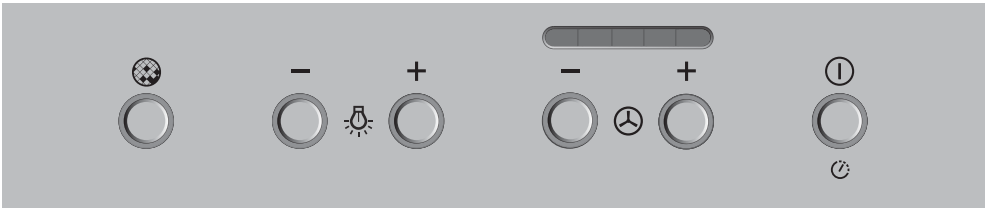

RANGEHOOD CONTROL PANEL FEATURES		
	Power	Turns your rangehood ON and OFF. Also allows you to delay shut off.
− +	**Fan speed**	Allows you to change the fan speed.
1 2 3 4 5	**Fan speed indicator**	Indicates the current speed of the fan. 1 is the lowest fan speed and 5 the highest.
− +	**Light**	Allows you to adjust the level of lighting.
	Clean filter reminder	Button will illuminate red indicating when your filters require cleaning.

Power

On/Off

Use the ⏻ button to turn your rangehood ON and OFF. When you turn your rangehood on it will remember the last setting used for your fan speed and lighting level with the following exceptions:

- If the fan was off, it will turn on at fan speed 1.
- If the lighting was off, it will turn on at the lowest lighting level.

Note: The fan and lighting can be turned off independently.

Delayed shut off

To use delayed shut off:

- Press and hold the ⏻ button, the light around the button will blink.
- The fan speed will operate for 5 minutes, starting at the current speed and then at each decreasing speed before turning OFF (the fan will stop and the light will go out).
- To increase the delayed shut off time, press and hold the ⏻ button again, you will hear a beep. Each beep indicates the delayed shut off time has been increased by 5 minutes. The maximum delayed shut off time is 25 minutes.

To cancel delayed shut off:

- Press the ⏻ button once.

Fan speed

- To turn the fan ON, press the + button.
- Press the + button to increase the fan speed.
- To go straight to the MAX fan speed, press and hold the + button. The fan will go straight to speed 5.
- To decrease the fan speed press the − button.
- To turn the fan OFF, press and hold the − button.

Light

- To turn the light ON, press the + button.
- Press the + button again to increase the brightness of the lighting.
- Press and hold the + button to go straight to the brightest lighting.
- Press the − button to decrease the brightness of the lighting.
- To turn the light OFF, press and hold the − button.

Clean filter reminder

The clean filter button will blink red for 3 seconds when the rangehood is turned on, then remain illuminated red until the filters are cleaned and the clean filter reminder is reset.

To reset the clean filter reminder:
Once the filters have been cleaned and replaced in the rangehood the clean filter reminder should be reset.

- Press and hold the button.
  Note: Refer to ‘Filter cleaning’ for details on how to remove and replace your filters.

Remote control (selected models or optional extra)

Selected models have a remote control provided with the rangehood. This remote can also be purchased as an optional accessory for other models of this rangehood. The remote is designed to make your rangehood easier to use. It allows you to adjust the fan speed and brightness of lighting without touching the rangehood.

REMOTE CONTROL FEATURES		
	Fan speed	Allows you to adjust the speed of the fan.
	Light	Allows you to adjust the level of lighting.
	Battery indicator	Illuminates when the battery is running low.
	Signal indicator	Indicates if the remote control is paired with the rangehood.

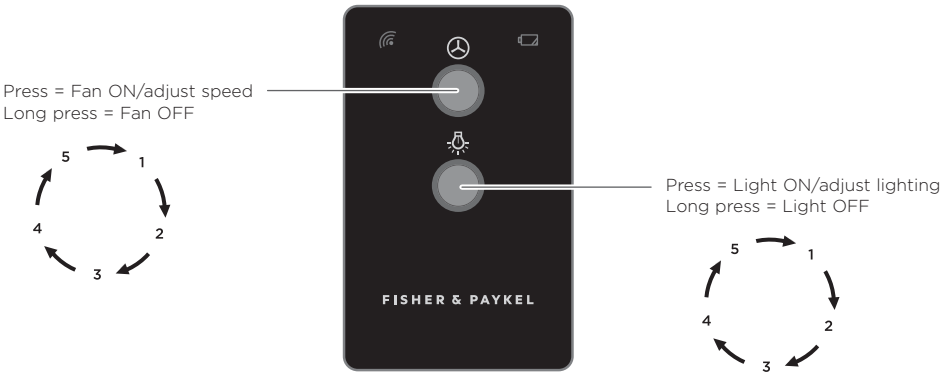

Fan speed

- To turn the fan ON, press the button once.
- Press the button to increase/decrease the fan speed. The fan speed will increase with each button press until it reaches fan speed 5, at the next button press it will return to fan speed 1.
- To turn the fan OFF, press and hold the button.

Light

- To turn the light ON, press the button once.
- To increase/decrease the brightness press the button. The light brightness will increase with each button press until it reaches its highest level, at the next button press it will return to the lowest level.
- To turn the light OFF, press and hold the button.

Battery indicator

The battery indictor will illuminate when the battery is running low and needs to be replaced.

Signal indicator

The signal indicator will illuminate when your rangehood is paired with the remote. The remote can then be used to control the fan speed and brightness of the lighting.

Remote pairing

- For selected models your remote will be paired with your rangehood in the factory prior to delivery.
- All other models, where the remote has been purchased as an optional extra, the remote will be paired by your Fisher & Paykel trained service technician after they install the remote receiver in your rangehood.

WARNING!

- **Before servicing or cleaning your rangehood, switch the power off at the control panel and disconnect the power to prevent power from being switched on accidentally.**
- **Allow the appliance to cool after the power has been turned off before servicing.**
- **There is a risk of fire if cleaning is not carried out in accordance with these instructions.**

IMPORTANT!

- **Wear gloves to protect against sharp edges.**

Clean your rangehood regularly to avoid the build-up of grease. Grease deposits are corrosive and may damage the rangehood. Use warm water with a mild liquid detergent and a clean soft cloth to wipe down all surfaces of the rangehood.

Do NOT use the following to clean your rangehood, they will damage and/or discolour the surfaces:

- Corrosive chemicals.
- Abrasive cleaning products.
- Citrus-based cleaning products.
- Hard brushes and steel wool.

Note: In areas of high humidity or coastal environments, cleaning should be carried out more frequently.

Filter cleaning

IMPORTANT!

- **The filters can cause damage and/or injury if dropped. Ensure you use both hands to remove and replace the filters.**

To remove the filters:

1. Use the handles to hold the filter (refer to **A**).
2. Pull the filter toward you, pushing against the springs to release the back of the filter from the rangehood (refer to **B**).
3. Lower the back of the filter and remove from the front of the rangehood (refer to **C**).

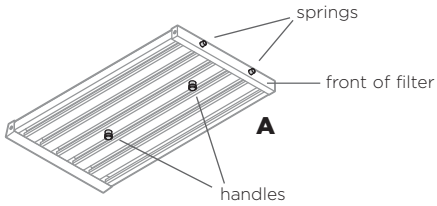

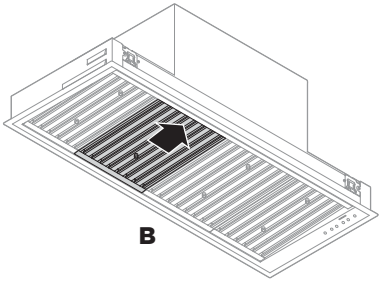

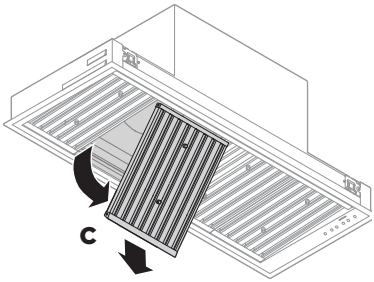

Clean the filters at least once a month. Filters may need to be cleaned more frequently depending on the cooking methods used and frequency of use. The clean filter reminder will illuminate to remind you to clean the filters.

To clean your filters:

- Remove the filters with both hands.
- Wash with a mild liquid detergent and hot water or in the dishwasher. If washed in the dishwasher, the filters should be placed in an upright position.
- After cleaning and drying, refit the filters.

Note: Do **NOT** operate the rangehood without the filters in place.
The filters help prevent damage to the inside of the rangehood.

To replace the filters:

① Place the front end of the filter on the ledge above the LED strip, against the inside front of the rangehood (refer to **D**), pull the filter toward you and push the back up into the rangehood (refer to **E**) until it firmly seats into place.

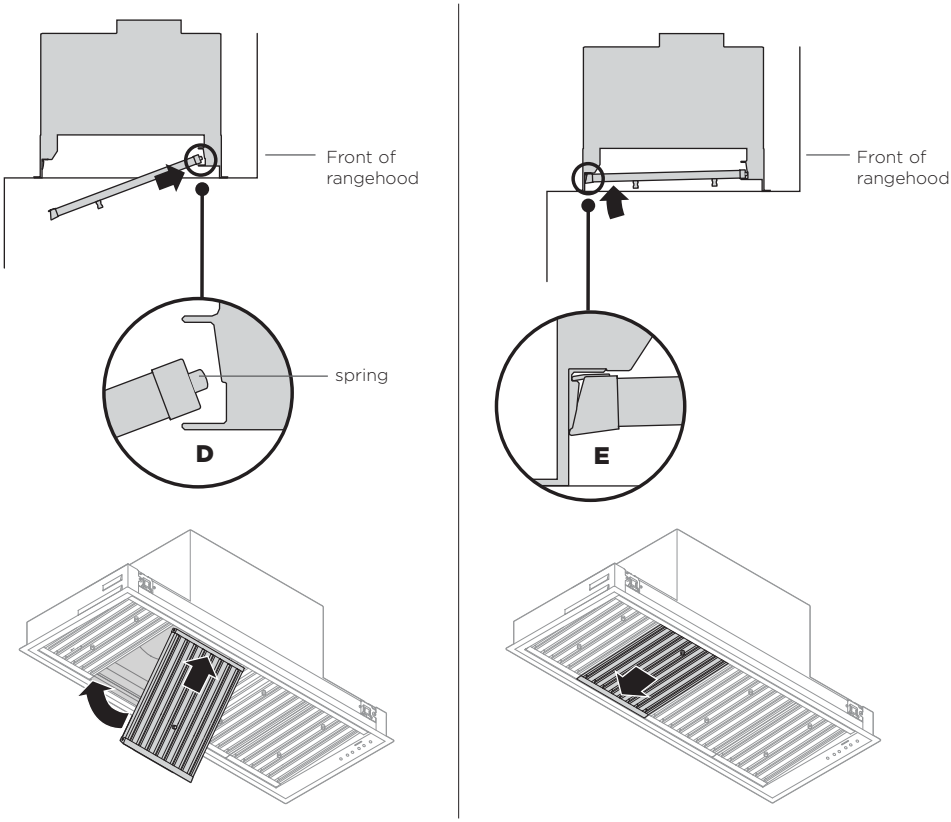

Replacing the LED lights

To replace the LED lights please contact your Fisher & Paykel trained and supported service technician. Refer to fisherpaykel.com or your separate service and warranty book provided with your rangehood for contact details.

TROUBLESHOOTING

PROBLEM	POSSIBLE CAUSES	WHAT TO DO
Fan has turned off automatically. Fan, light and power buttons will illuminate red.	This blower is equipped with a sensor to automatically turn OFF the fan when excessive heat is detected by the rangehood.	Remove the source of heat, wait until the control panel buttons are no longer illuminated before attempting to restart the rangehood.
Fan has turned on automatically. The fan speed buttons will illuminate red.	The heat guard sensor has activated. The rangehood has detected high temperature and has turned the fan on automatically.	To override press the fan speed buttons or turn the rangehood on/off. We recommend leaving the rangehood on to remove excess cooking heat. Refer to 'Heat guard' for further details.
Filter will not fit back into the rangehood	The filter has been inserted the wrong way around.	Turn the filter the other way round and try to insert again following the steps detailed in 'To replace the filters'.
Filter alert button is lit red	Filters require cleaning.	Turn off the rangehood, remove the filters, clean filters and replace. Refer to 'Filter cleaning' for further details.
Grease is dripping from the rangehood	The filters are saturated with grease and need to be cleaned.	Turn off the rangehood, remove the filters, clean filters and replace. Refer to 'Filter cleaning' for further details.
Excessive condensation appears on the rangehood surfaces	• Using an induction cooktop • High ambient temperature, humidity or low natural ventilation in the room • Height of rangehood installation.	Condensation can be minimised, refer to 'For best performance' for details.
The lighting is too dim	Lighting brightness needs to be increased.	Press the + button to increase the brightness of the lighting. Press and hold the + button to go straight to the brightest lighting. Refer to 'Light' for further details on adjusting the brightness.
Rangehood surfaces discoloured	Incorrect cleaning product has been used.	Refer to 'Cleaning and maintenance'.

Parts

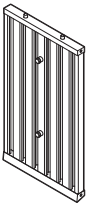

Filters
- 200mm x 225mm
- 200mm x 300mm
- 400mm x 225mm
- 400mm x 300mm

Remote control

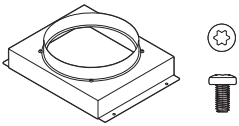

Duct adapter
- 8mm T20 drive screws (4) (selected models)

Note: HPB9048-2 & HPB12048-2 have a 250mm outlet.

Accessories

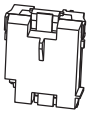

Remote control kit
- Remote control (1)
- Wireless receiver (1)

SERVICE AND WARRANTY

For details of your manufacturer's warranty and contacts for servicing, please refer to your separate service and warranty book provided with your rangehood.

Complete and keep for safe reference:

Model _____

Serial No. _____

Purchase Date _____

Purchaser _____

Dealer _____

Suburb _____

Town _____

Country _____

FISHERPAYKEL.COM

© Fisher & Paykel Appliances 2019. All rights reserved.

The product specifications in this document apply to the specific products and models described at the date of issue. Under our policy of continuous product improvement, these specifications may change at any time. You should therefore check with your Dealer to ensure this document correctly describes the product currently available.

NZ AU ROW

105463A 02.19