# Front Load Washer, 2.4 cu ft

Series 5 | Front Load

A compact washer with multiple cycles including Sanitize, plus a Quick 30 minute cycle to save you precious time

- 13 wash cycles including Sanitize, Sports and Wool wash
- 1400 RPM spin speed means more water is extracted from your items, resulting in a shorter dry cycle
- Energy Star certified

## DIMENSIONS

| | |
|---|---|
| **Height** | **33 1/4 - 33 5/8"** |
| **Width** | **23 7/16"** |
| **Depth** | **25 3/8"** |

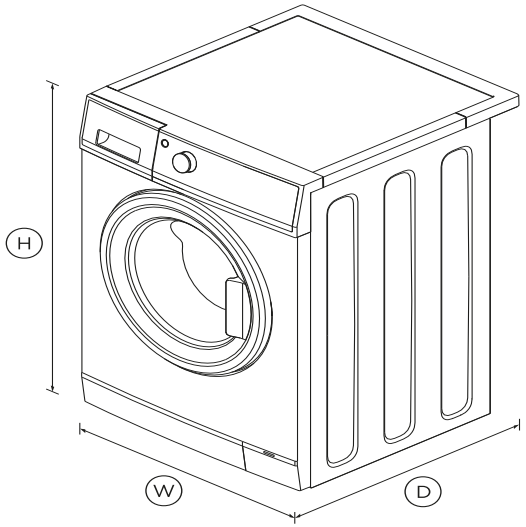


## FEATURES & BENEFITS

### SMARTDRIVE(TM) TECHNOLOGY

SmartDrive™ Technology is a gentle, quiet, and efficient combination of smart electronics and a direct drive motor that senses the load to deliver better fabric care.

### LARGE CAPACITY

This Fisher & Paykel compact washer can wash up to 2.4 cubic feet per cycle, reducing the number of times you have to run your machine and saving precious time.

### ADD A GARMENT

The Add a Garment feature allows you to quickly add or remove any size garment mid cycle. Simply press the Add a Garment button and the door will unlock. If the drum water is too high, just enough will be drained out before the door is unlocked.

### 13 FABRIC CARE CYCLES

13 wash cycles are available to cater for every type of wash that your household will require including Handwash, Sports and Sanitize cycles.

### ENERGY STAR CERTIFIED

Our SmartDrive™ Front Loaders are Energy Star certified, making them some of the most efficient front loaders on the market.

### SANITIZE WASH

A cycle designed to provide extra security – the wash temperature reaches a heat that kills any additional bacteria hanging around.

## SPECIFICATIONS

**Accessories (sold separately)**

| | |
|---|---|
| Stacking kit | • |

**Capacity**

| | |
|---|---|
| Capacity | **2.4cu ft** |

**Consumption**

| | |
|---|---|
| Energy rating | **Energy star** |

**Features**

| | |
|---|---|
| Add a garment (immediate | • |
| Anti-fungal door gasket | • |
| Auto out of balance correction | • |

| | |
|---|---|
| Child/Keylock | • |
| Choice of cold only or hot and | • |
| Delay start | • |
| Eco rinse | • |
| Extra rinse option | • |
| Flood protection | • |
| No spin / Spin Hold | • |
| Pre Wash | • |
| Progress indicator | • |
| SmartTouch™ control dial | • |
| Soil levels | **3** |
| Spin speeds | **4** |
| Timed liquid detergent | • |
| Water supply | **Hot & Cold** |
| Water temperature controls | **5** |
| Wrinkle Free | • |

### Performance

| | |
|---|---|
| Detergent | **High efficiency** |
| Maximum spin speed | **1400rpm** |
| Number of spin speeds | **4** |
| Smart Diagnosis of problems | • |
| SmartDrive™ technology | • |
| Vortex Wash | • |

### Product dimensions

| | |
|---|---|
| Depth | **25 3/8″** |
| Height | **33 1/4 - 33 5/8″** |
| Width | **23 7/16″** |

### Warranty

| | |
|---|---|
| Parts and labour | **2 years** |
| Parts only SmartDrive™ Motor | **10 years** |

### Wash Cycles

| | |
|---|---|
| Bulky | • |
| Cottons | • |
| Customise cycle | • |
| Delicate | • |
| Drum Clean | • |
| Everyday | • |
| Handwash | • |
| Heavy | • |
| Number of wash cycles | **12** |
| Quick 30 | • |
| Rinse | • |
| Spin | • |
| Sports | • |

| | |
|---|---|
| SKU | 96236 |

The product dimensions and specifications in this page apply to the specific product and model. Under our policy of continuous improvement, these dimensions and specifications may change at any time. You should therefore check with Fisher & Paykel's Customer Care Centre to ensure this page correctly describes the model currently available. ? Fisher & Paykel Appliances Ltd 2020

**A PEACE OF MIND SALE**

**24 Hours 7 Days a Week Customer Support**

**T** 1.888.936.7872 **W**www.fisherpaykel.com