9kg Series 9 Heat Pump Dryer, Steam Care

Series 9 | Heat Pump

White



Better energy efficiency and fabric care with heat pump condensing technology, which quickly dries your clothes at a lower temperature.

- 23 fabric care cycles including Hygiene, Activewear, and Silk
- Quickly deodorise, dewrinkle and refresh clothes with Steam Freshen
- Speed mode reduces drying times of cycles
- TangleProtect technology reduces clothes tangling and ensures even drying

DIMENSIONS

Height	850 mm
Width	600 mm
Depth	670 mm

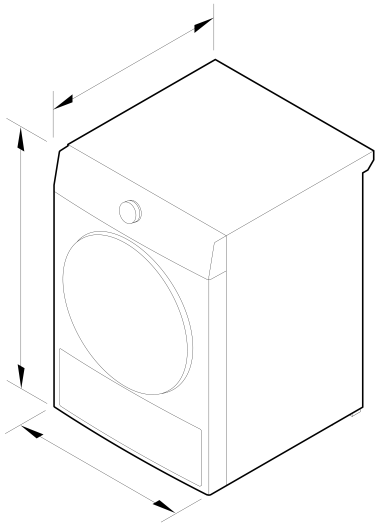

FEATURES & BENEFITS

The Pinnacle Of Fabric Care

Intuitive controls with clever drying hints help you get the best results. The LCD display provides a simple interface to select from 23 dry cycles; including Steam Freshen, Hygiene, Activewear, Wool, Silk and Denim.

Dewrinkle, Deodorise, Detangle

Steam cycle is perfect for occasions where clothes have been worn once and need freshening up. An alternative to full-cycle washes, it removes odours without using detergent, and gently eases the creases out of clothes to save you precious time spent ironing.

Customise Your Drying With Optimise Dry

For a focus on energy efficiency, dry with the default Optimise Dry Eco option. Choose Speed to shorten cycle times, while Quiet mode reduces cycle noise – perfect for late night laundry. Available on Everyday, Cottons, Towels and Heavy cycles.

Tangleprotect Technology

TangleProtect technology pairs an advanced air circulation system with true reverse tumbling to reduce tangling and balling during the dry cycle – ensuring your clothes and sheets are dried consistently and evenly.

Faster Dry Times

Speed mode utilises a variable speed compressor to deliver a faster drying time, closer to timings experienced with vented dryers.

Energy Efficient

This dryer uses heat pump technology to gently and effectively dry clothes at low temperatures.

Health And Hygiene

The Hygiene cycle provides extra protection for your clothes. The extra high dry temperature is designed to kill more than 99.9% of bacteria and reduce allergens, perfect for durables such as sheets and towels.

SPECIFICATIONS

Capacity

Total capacity	9 kg

Controls

Beeps on/off function	•
Screen brightness settings	•

Dry Cycles

Activewear	•

Bulky	•
Cool air	•
Cottons	•
Delicate	•
Denim	•
Easy Iron	•
Everyday	•
Heavy	•
Hygiene	•
Number of cycles	23
Outdoor	•
Pre iron	•
Rack dry	•
Sheets	•
Silk	•
Sneakers	•
Soft toys	•
Sports	•
Time dry	•
Towels	•
Ultra delicate	•
Wool	•

Features

Clean condenser filter reminder	•
Damp dry signal	•
Drain Hose	included
Drum light	•
Drying rack	•
Easy access lint filter	•
Easy clean condenser filter	•
Eco mode	•
End of cycle signal	•
Favourite cycle	•
Hygiene cycle	•
Keylock	•
LCD screen	•
No external venting	•
Quiet mode	•
Removable water tank	•
SmartTouch™ control dial	•
Speed mode	•
Stainless steel drum	•
Time to go	•
Woolmark certified	•
Wrinkle free option	•

Performance

Auto sensing	•
Compressor type	Variable speed
Dryness settings	5
Heat pump technology	•
Optimise Dry	Speed, Eco, Quiet
Reverse tumbling	Full reverse tumbling
Steam Care	•
TangleProtect	•
Time dry	30

Product dimensions

Depth	670 mm
Height	850 mm
Width	600 mm

SKU	94227

The product dimensions and specifications in this page apply to the specific product and model. Under our policy of continuous improvement, these dimensions and specifications may change at any time. You should therefore check with Fisher & Paykel's Customer Care Centre to ensure this page correctly describes the model currently available. © Fisher & Paykel Appliances Ltd 2020

Other product downloads available at fisherpaykel.com

- Installation Guide (Chinese)
- User Guide (Chinese)

Where applicable:

All appliances use energy, and energy usage typically generates carbon emissions. **Fisher & Paykel Appliances' In-use Energy Carbon Emissions Estimate** indicates carbon emissions from a product's in-use energy. This is calculated either annually or per cycle, using the product's market-specific energy label energy consumption data multiplied by the carbon emissions factor for energy in your country or region.

Our In-use Energy Carbon Emissions Estimate is designed to assist customers in making informed purchasing decisions when comparing different Fisher & Paykel products. For example, a heat pump dryer typically has a lower In-use Energy Carbon Emissions Estimate than a vented dryer.