487L Series 7 French Door Refrigerator Freezer

Series 7 | Contemporary

Stainless Steel | French hinge



You'll have plenty of flexible storage space in this striking, large capacity French Door refrigerator freezer.

- ActiveSmart™ technology helps keep food fresher for longer by constantly maintaining the ideal temperature.
- Spacious bottom freezer with full extension drawer gives easy access to frozen goods.

DIMENSIONS

Height	1715 mm
Width	790 mm
Depth	695 mm

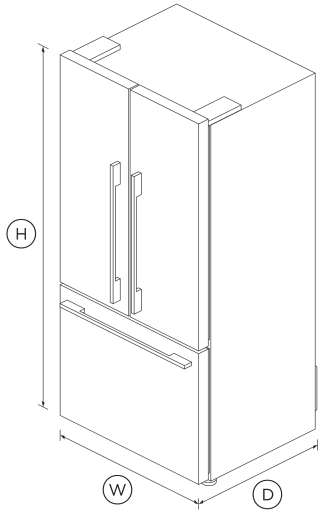

FEATURES & BENEFITS

Humidity Control System

Your fruit and veges need different environments. The humidity control slides in each storage bin create a microclimate that helps keep food fresher for longer.

Easy Cleaning

Spill-safe secure glass shelves easily capture any drips or leaks and prevent them from falling on items below.

Clever Energy

Your fridge adapts to daily use by cooling and defrosting only when needed. This means your fridge uses the energy it needs without compromising on food care.

Simple storage

This refrigerator is designed to make it simple for you to store, access and remove food. Storage bins give you full access inside when they're pulled open and can be easily removed to clean. Our flexible shelving also gives you more storage options.

SPECIFICATIONS

Capacity

Total gross capacity	519 L
Volume	487 L
Volume freezer	142 L
Volume refrigerator	345 L

Connected Features

Cyber security updates until	04 / 03 / 2028

Consumption

Energy rating	3 star (IEC - 2015), 3.5 star (AS/NZS - 2009)
Energy usage	429kWh/year (IEC 62552- 2015), 412kWh/year (AS/NZS 4474.2:2009)
In-use energy carbon emissions estimate	261.8kgCO2e/year (IEC 62552- 2015), 251.4kgCO2e/year (AS/NZS 4474.2:2009)

Features

Adjustable door shelves	6
Adjustable glass shelves	3
Covered door shelves	2
Door alarm	•
Fruit and vegetable bins	2

LED lighting	•
Smart appliance	•
SmartTouch control panel	•
Stackable bottle holders	4

Freezer Features

Bottle chill	•
Door alarm	•
Fast freeze	•
Ice bin and scoop	•
Large plastic bins	•

Performance

ActiveSmart™ Foodcare	•
Adaptive defrost	•
Frost free freezer	•
Humidity control system	•
Inverter controlled compressor	•
Noise emissions	42 dBA
Noise emissions class	D
Sabbath mode	•

Power requirements

Rated current	10 A
Supply frequency	50 Hz
Supply voltage	220 - 240 V

Product dimensions

Depth	695 mm
Depth (including handles)	730 mm
Height	1715 mm
Width	790 mm

SKU	26413

The product dimensions and specifications in this page apply to the specific product and model. Under our policy of continuous improvement, these dimensions and specifications may change at any time. You should therefore check with Fisher & Paykel's Customer Care Centre to ensure this page correctly describes the model currently available. © Fisher & Paykel Appliances Ltd 2020

Other product downloads available at fisherpaykel.com

- DXF
- Data Sheet (English)
- DWG
- Energy Label
- Installation Guide (English)
- User Guide (English)

Where applicable:

All appliances use energy, and energy usage typically generates carbon emissions. **Fisher & Paykel Appliances' In-use Energy Carbon Emissions Estimate** indicates carbon emissions from a product's in-use energy. This is calculated either annually or per cycle, using the product's market-specific energy label energy consumption data multiplied by the carbon emissions factor for energy in your country or region.

Our In-use Energy Carbon Emissions Estimate is designed to assist customers in making informed purchasing decisions when comparing different Fisher & Paykel products. For example, a heat pump dryer typically has a lower In-use Energy Carbon Emissions Estimate than a vented dryer.

24/7

A PEACE OF MIND SALE
24 Hours 7 Days a Week Customer Support
T 1300 650 590 Wwww.fisherpaykel.com