60cm Series 11 Contemporary Compact Combi-Steam Oven

Series 11 | Contemporary

Stainless Steel



With a subtle black glass finish, this Contemporary style oven has 23 functions including steam-only, to effortlessly create healthy and delicious dishes.

- Precise temperature control with steam-only cooking, convection-only, or a combination of both
- 23 oven functions including Steam, Sous Vide, Air Fry and Vent Bake
- Designed to match with companion products such as vacuum seal drawers
- Guided touchscreen cooking makes it simple to cook by food, function or recipe

DIMENSIONS

Height	598 mm
Width	596 mm
Depth	565 mm

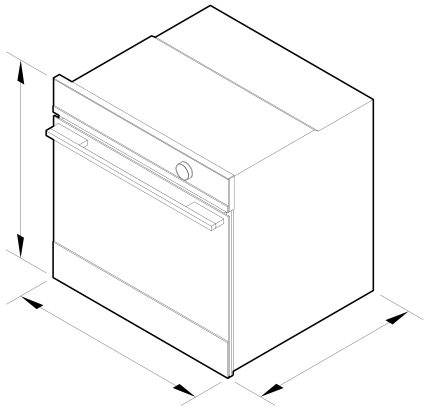

FEATURES & BENEFITS

Complementary Design

Every detail has been carefully crafted from the finest materials to support a considered kitchen design. This Contemporary style oven has a stylish black finish with stainless steel contrasts, designed to help you achieve a kitchen aesthetic that suits your design style. Pair with a Vacuum Seal Drawer for the ultimate kitchen solution.

From Steam To Sous Vide

Fine amounts of steam are released with accuracy and precision at a range of temperatures, to ensure food is cooked gently and evenly. Perfect for entertaining, you can sous vide proteins such as steak and salmon before guests arrive, and simply sear when ready to serve. The flexibility of timing and accuracy of temperature control ensure perfect, predictable results every time.

Gentle And Healthy

Steam functions allow you to cook food in its own juices to retain nutrients, moisture and flavour. With five steam-only cooking functions including Sous Vide, this oven lets you enjoy the benefits of flavourful and healthy restaurant-quality meals at home.

Multi-Function Flexibility

A truly multiple function oven where both steam-only and convection-only cooking mediums can stand on their own merits. You have the freedom to choose – whether it's dry heat or moist heat, or a combination of the two – each delivering different cooking results. A Wireless Temperature Sensor precisely monitors cooking in real time, giving you complete control.

Cook With Confidence

Using the intuitive touchscreen interface, you can cook with a favourite method, a hero ingredient, or a go-to cooking function or recipe. Your oven will guide you through steps, or change temperature and heat type automatically, depending on your selection.

Reheat And Restore

Reduce household food waste by reheating foods with steam, which helps to regenerate moisture levels and ensure meals come out fresh and delicious. Use Steam Regenerate to reheat leftover meals such as roasts and risotto, while Crisp Regenerate is perfect for refreshing pastries, breads and pizza.

Exceptional Convection Performance

AeroTech circulates heat evenly for a consistent temperature throughout the cavity, while ActiveVent technology ensures optimised moisture levels when using convection functions. Achieve perfect results even when you're using multiple shelves.

SPECIFICATIONS

Accessories (included)

Broil grid	1
Descale solution	2 sachets, Part 580925
Full extension sliding shelves	2 sets
Large steam dish	1
Perforated baking tray	1
Perforated large steam dish	1
Perforated small steam dish	1
Wired temperature sensor	1

Capacity

Shelf positions	6
Total capacity	85 L
Usable capacity	72 L
Water tank capacity	1.5L

Cleaning

Acid resistant graphite enamel	•
Descale cycle	•
Drying cycle	•
Removable oven door	•
Removable oven door inner glass	•
Removable side ladders	•
Steam clean (oven)	•

Controls

Adjustable audio and display settings	•
Automatic cooking/minute timer	•
Automatic pre-set temperatures	•
Celsius/Fahrenheit temperature	•
Certified Sabbath mode	•
Electronic clock	•
Electronic oven control	•
Guided cooking by food type and recipes	•
Intuitive touchscreen display	•
Multi-language display	UK English

Functions

Air fry	•
Bake	•
Classic bake	•
Crisp regenerate	•
Fan bake	•
Fan forced	•
Fan forced + High steam	•
Fan forced + Low steam	•
Fan forced + Medium steam	•
Fan grill	•
Grill	•
Number of functions	23
Pastry Bake	•
Pizza bake	•
Roast	•
Slow cook	•
Sous vide	•
Steam	•
Steam clean (oven)	•
Steam defrost	•
Steam proof	•
Steam regenerate	•
Vent bake	•
Warm	•

Performance

ActiveVent™ system	•
AeroTech™ technology	•
Automatic rapid pre-heat	•
Grill power	3000 W
SteamTechnology	•
Temperature range	35°C – 230°C
Whisper quiet cooking	•

Power requirements

Amperage	15 A
Supply voltage	220 - 240 V

Product dimensions

Depth	565 mm
Height	598 mm
Width	596 mm

Safety

Balanced oven door	•
Catalytic venting system	•
Control panel key lock	•
CoolTouch door	•
Non-tip shelves	•

SKU	82248

The product dimensions and specifications in this page apply to the specific product and model. Under our policy of continuous improvement, these dimensions and specifications may change at any time. You should therefore check with Fisher & Paykel's Customer Care Centre to ensure this page correctly describes the model currently available. © Fisher & Paykel Appliances Ltd 2020

Other product downloads available at fisherpaykel.com

- Installation Guide (English)
- User Guide (English)
- DXF
- DWG
- Revit
- Rhino
- Restriction of the Use of Hazardous Substances (Chinese)
- SketchUp
- Installation Guide (Chinese)
- User Guide (Chinese)

Where applicable:

All appliances use energy, and energy usage typically generates carbon emissions. **Fisher & Paykel Appliances' In-use Energy Carbon Emissions Estimate** indicates carbon emissions from a product's in-use energy. This is calculated either annually or per cycle, using the product's market-specific energy label energy consumption data multiplied by the carbon emissions factor for energy in your country or region.

Our In-use Energy Carbon Emissions Estimate is designed to assist customers in making informed purchasing decisions when comparing different Fisher & Paykel products. For example, a heat pump dryer typically has a lower In-use Energy Carbon Emissions Estimate than a vented dryer.