90cm Series 7 Tilt Chimney Wall Rangehood

Series 7 | Contemporary

Stainless Steel and Glass



Sleek and streamlined, this tilt chimney rangehood has smart technology, extracting steam, grease and cooking odours quickly and efficiently.

- Stable air extraction, perfect for high-rise apartments
- Intuitive on and off gesture control
- Air purification function for cleaner air
- Motorised central panel automatically closes, for a beautifully streamlined look

DIMENSIONS

Height	805-1105 mm
Width	900 mm
Depth	418 mm

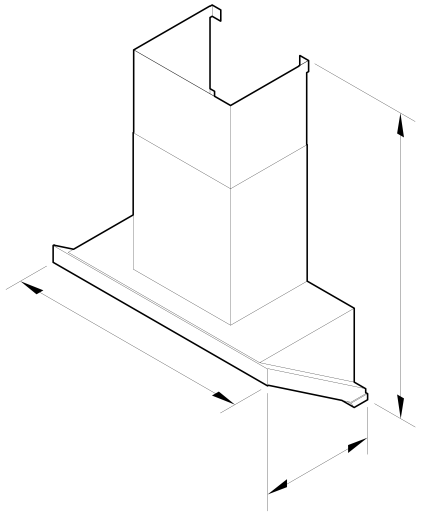

FEATURES & BENEFITS

Adapts To Your Environment

Smart technology ensures stable extraction of smoke and fumes by constantly adjusting the extraction rate. This makes it perfect for any home, especially high-rise apartments and large apartment buildings.

Simple To Use

Intuitive gesture control makes it easy to turn the rangehood on and off with a wave of your hand. A sleek, touch-control panel controls your fan speed as well as the low energy LED lights.

Cleaner Air

An intensive air purification function clears cooking vapours quickly and efficiently, leaving the kitchen air cleaner.

Easy Installation

This wall chimney rangehood is the perfect partner to your Fisher & Paykel cooktop. It is externally ducted, making it perfect for apartments.

Effective Extraction

Three airflow settings ensure that odours, vapour and steam are removed quickly, while a grease filtration system effectively captures grease and oil from the air stream.

Easy Cleaning

An easy-to-remove drip tray captures any excess cooking oils that accumulate during extraction. Simply remove and empty the tray when full, to ensure you get the best performance out of your rangehood.

Seamless Integration

This rangehood features sleek black glass and stainless steel styling that will complement any contemporary kitchen, and is designed to match the rest of Fisher & Paykel's kitchen appliance family.

SPECIFICATIONS

Fan ratings

Maximum air movement	840 m³/hr
Maximum sound rating	62 dBA

Installation and cleaning

Dishwasher safe filters	1

Performance

Extraction type	Surface
Fan speeds	3
Filter type	Stainless Steel Baffle

Number of filters	1

Power requirements

Lighting power	3 W
Rated current	3 A
Supply frequency	50 Hz

Product dimensions

Depth	418 mm
Height	805-1105 mm
Width	900 mm

Ventilation features

Air quality sensor and purification function	•
Gesture control	•
Intelligent Air	•
Light type	LED

SKU	50176

The product dimensions and specifications in this page apply to the specific product and model. Under our policy of continuous improvement, these dimensions and specifications may change at any time. You should therefore check with Fisher & Paykel's Customer Care Centre to ensure this page correctly describes the model currently available. © Fisher & Paykel Appliances Ltd 2020

Other product downloads available at fisherpaykel.com

- Archicad

- Archicad
- Installation Guide (Chinese)
- User Guide (Chinese)
- Revit
- Revit
- Rhino
- Rhino
- Rhino
- Rhino
- Restriction of the Use of Hazardous Substances (Chinese)
- SketchUp - Door Open
- SketchUp
- SketchUp - Door Open

Where applicable:

All appliances use energy, and energy usage typically generates carbon emissions. **Fisher & Paykel Appliances' In-use Energy Carbon Emissions Estimate** indicates carbon emissions from a product's in-use energy. This is calculated either annually or per cycle, using the product's market-specific energy label energy consumption data multiplied by the carbon emissions factor for energy in your country or region.

Our In-use Energy Carbon Emissions Estimate is designed to assist customers in making informed purchasing decisions when comparing different Fisher & Paykel products. For example, a heat pump dryer typically has a lower In-use Energy Carbon Emissions Estimate than a vented dryer.