12kg Series 5 Contemporary Front Loader Washer, FlexiDose

Series 5 | Front Load

White



A Front Loader Washer with all the essentials, in a clean and considered design. Simple controls that stay discreet when not in use and added flexibility bring ease and convenience to everyday life.

- Gentle care for 6 fibre types, including Mixed loads and Down
- Flexi Dose for customised Auto Dose of up to 21 washes without refilling
- Intelligent sensors detect load size and adjust water and energy use
- Connect SmartHQ™ for real-time updates, guides and extra functions

DIMENSIONS

Height	850 mm
Width	602 mm
Depth	661 mm

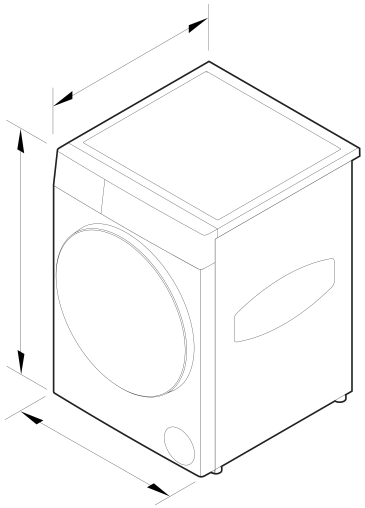

FEATURES & BENEFITS

ESSENTIAL CARE FOR EVERYDAY

Fisher & Paykel Series 5 Washers deliver fabric care you know and trust, now made smarter. From Down and Elastane to Woolmark Black certified cycles, intelligent technology automatically adjusts the wash for each fibre type, balancing the perfect clean and gentle care. Using the display which stays discreet when not in use, options for item type, colour and soil level let you further refine each wash, ensuring optimal care to extend the life of your garments.

AUTO DOSING YOU CAN CUSTOMISE

Everyday routines are simpler when the details are taken care of for you. Auto Dose dispenses the precise amount of detergent each time, ensuring consistent care and optimal performance in every load. Ideal to help preserve the colour of dark Denim, with fibres that can swell when wet and fade if exposed to excess detergent. Active Mix blends detergent with water before it enters the drum for better absorption, while two Flexi Dose reservoirs let you use detergent, softener, or extra detergent when needed — storing enough for up to 21 washes when both are used for detergent.

REFRESH WITH STEAM

Gently relax fibres to reduce wrinkles and odours with Steam Refresh. Perfect for a Cotton shirt that doesn't need a full wash, steam provides just enough heat and moisture required to break the molecular bonds that cause wrinkles, without fully saturating the garment. Steam penetrates the porous structure within the fibre allowing wrinkles to fall away.

CLASS-LEADING EFFICIENCY

Designed to reduce running costs and environmental impact with 5-star energy and 5-star water ratings, you can trust that your fabric care routine is both effective and sustainable. The SmartDrive™ motor ensures quiet operation and long-lasting reliability, with fewer moving parts for reduced wear over time.

WASHING THAT WAITS FOR YOU

Crease Free gives you flexibility to unload laundry when it suits you. Ideal for Cotton which has fibre bonds that temporarily loosen during washing and if left sitting while damp, these bonds can set into creases. By gently tumbling the load after a wash, Crease Free minimises wrinkle causing conditions, keeping fibres smooth and garments looking their best.

GENTLE AND HYGIENIC

Keep garments hygienic with two sanitising options, both proven to eliminate 99.9% of bacteria*. UV Sanitise works at low temperatures, ideal for heat-sensitive fibres like Elastane that can degrade under high heat. For more durable fabrics, hot water Sanitise (only selectable via the SmartHQ™ app) delivers a traditional-high temperature clean. *UV Sanitise independently certified to eliminate 99.9% of Staphylococcus aureus and Escherichia coli using the Cotton Fibre Type, Durable Item Type, Sanitise Treatment, Dark Colour, Moderate Soil Level and Manual Auto Dose settings. Sanitise independently certified to eliminate 99.9% of Staphylococcus aureus and Escherichia coli using the Mixed Fibre Type, Moderate Item Type, Sanitise Treatment, Mixed Colour, Moderate Soil Level and Manual Auto Dose settings.

DESIGNED TO MATCH

Our most perfect pair yet, reimagined for modern living. Designed to complement one another in both form and function, our Front Loader Washers and Heat Pump Dryers feature refined materials, large doors and complementary cycles that work in harmony to care for every fibre. An angled interface that stays discreet when not in use, and a newly positioned lint filter on the dryer creates a seamless fabric care experience that's elevated beyond the utility space.

SPECIFICATIONS

Capacity

Capacity	12 kg

Connected Features

Alerts and notifications	•
Education and onboarding	•
Monitoring	•
Remote operation	•
Software updates	•

Consumption

Rated capacity (AU NZ only)	12
Water efficiency (WELS) rating	4 ticks

Controls

Interface type	LED touch display
Two button start compliant	•

Features

Active Mix	•
Add a garment (immediate door opening)	•
Advanced out of balance detection	•
Anti-Bacteria Treatment (ABT)	•
Anti-fungal door gasket	•
Auto out of balance correction	•
Automatic water level	•
Controlled cold	•
Crease Free	•
Delay start	•
Detergent dispenser	Auto Dose
Excess suds detection	•
Extra large door	•
Extra Rinse	via SmartHQ app
Fabric softener dispenser	Auto Dose
Favourite mode	Multiple
Flood protection	•
Front and back levelling feet	•
Interior light	•
Keylock	•
Optimise Wash	via SmartHQ app
Pre Wash Cold	via SmartHQ app
Quiet mode	via SmartHQ app
Reverse tumbling	Full reverse tumbling
Soak	via SmartHQ app
Stainless steel drum	•
Time saver function	•
Time to go	•
Water supply	Hot & Cold
Woolmark certified	Woolmark Black

Performance

Auto load sensing	•
Maximum spin speed	1400 rpm
Motor type	Direct Drive
Number of spin speeds	4
SmartDrive™ technology	•
Vortex wash	•

Product dimensions

Depth	661 mm
Height	850 mm
Width	602 mm

SKU	92309

The product dimensions and specifications in this page apply to the specific product and model. Under our policy of continuous improvement, these dimensions and specifications may change at any time. You should therefore check with Fisher & Paykel's Customer Care Centre to ensure this page correctly describes the model currently available. © Fisher & Paykel Appliances Ltd 2020

Other product downloads available at fisherpaykel.com

Where applicable:

All appliances use energy, and energy usage typically generates carbon emissions. **Fisher & Paykel Appliances' In-use Energy Carbon Emissions Estimate** indicates carbon emissions from a product's in-use energy. This is calculated either annually or per cycle, using the product's market-specific energy label energy consumption data multiplied by the carbon emissions factor for energy in your country or region.

Our In-use Energy Carbon Emissions Estimate is designed to assist customers in making informed purchasing decisions when comparing different Fisher & Paykel products. For example, a heat pump dryer typically has a lower In-use Energy Carbon Emissions Estimate than a vented dryer.



A PEACE OF MIND SALE
24 Hours 7 Days a Week Customer Support

T +65 6741 0777 Wwww.fisherpaykel.com