30" Series 9 Professional Warming Drawer

Series 9 | Professional

Stainless Steel



With a bold and distinctive design this Warming Drawer keeps food and plates warm, with additional functions like Rapid Proof and Dehydrate.

- Soft close drawer with room for up to 16 standard-sized place settings
- Simple and intuitive touch controls for effortless operation
- Automatic switch-off and delayed start to keep dishes warm until it is time to serve
- Designed to match our Professional style appliances, for the ultimate kitchen solution

DIMENSIONS

Height	10 11/16 "
Width	29 7/8 "
Depth	22 1/2 "

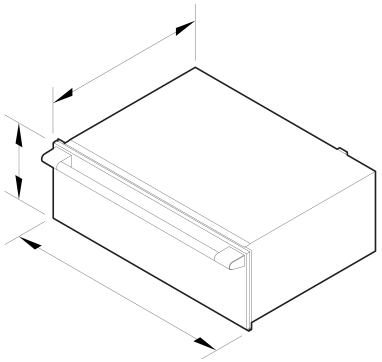

FEATURES & BENEFITS

MULTI-FUNCTION FLEXIBILITY

With space for up to 16 place settings or 20 cappuccino cups, our warming drawer is the ideal kitchen companion. Choose from six tailored functions, including Rapid Proof for dough, Dehydrate for drying foods, and Slow Cook for tender, flavorful meals.

PRECISE CONTROL

With gentle, even heating, our warming drawer is perfect for keeping dishes warm or gently cooking at low temperatures. Maintain the ideal serving temperature for every course, from delicate entrées to desserts, or use it to slowly develop rich, tender textures in your favorite recipes.

SAFE AND SOUND

With automatic switch-off and delayed start functionality, our warming drawers help keep dishes warm until you are ready to serve.

EASY TO CLEAN

Cleaning and care of the warming drawer is simple. After each use, just wipe out the smooth glass base with a damp cloth.

DESIGNED TO MATCH

Designed to complement our Professional style family of appliances, this Warming Drawer features a stainless steel finish with refined detailing. Able to be seamlessly built in almost anywhere, our companion products are crafted to align beautifully and install at the height that best suits your kitchen and lifestyle.

SPECIFICATIONS

Accessories (included)

Wire shelf	1

Accessories (sold separately)

Handle kit Professional round flush	AHP30BWBVB30 DC AHP30BWBVB30 BA

Capacity

Accessory rack maximum allowable weight	42lb
Cappuccino cups	24
Espresso cups	54
Maximum allowable weight	55 lbs
Place settings	16

Cleaning

Easy clean smooth-glass base	•

Controls

Audio feedback	•
Electronic capacitive touch controls	•
Pre-set heating functions	•
Standby mode	•

Functions

Cups	•
Dehydrate	•
Number of functions	6
Plates	•
Rapid proof	•
Slow cook	•
Warm	•

Performance

Heated glass base and fan	•
Low temperature cooking	•
Temperature levels	6

Power requirements

Amperage	10 A
Supply frequency	60 Hz
Supply voltage	120 V

Product dimensions

Depth	22 1/2 "
Height	10 11/16 "
Width	29 7/8 "

Safety

Automatic turn off after 12 hours	•
Full extension slides	•

SKU	85476

The product dimensions and specifications in this page apply to the specific product and model. Under our policy of continuous improvement, these dimensions and specifications may change at any time. You should therefore check with Fisher & Paykel's Customer Care Centre to ensure this page correctly describes the model currently available. © Fisher & Paykel Appliances Ltd 2020

Other product downloads available at fisherpaykel.com

- DWG
- DXF
- Care & Maintenance (English)
- Care & Maintenance (Canadian French)
- Care & Maintenance (Spanish)
- First Use (English)
- First Use (Canadian French)
- First Use (Spanish)
- Installation Guide (English)
- Installation Guide (Canadian French)
- Installation Guide (Spanish)
- Installation Considerations (English, Canadian French, Spanish)
- Planning Guide - 30" Professional (English)
- Planning Guide - 30" Professional (Canadian French)
- Planning Guide - 30" Professional (Spanish)
- Revit
- Rhino
- Right To Repair Declaration (English, Canadian French)
- Safety & Warnings (English, Canadian French, Spanish)
- SketchUp

Where applicable:

All appliances use energy, and energy usage typically generates carbon emissions. **Fisher & Paykel Appliances' In-use Energy Carbon Emissions Estimate** indicates carbon emissions from a product's in-use energy. This is calculated either annually or per cycle, using the product's market-specific energy label energy consumption data multiplied by the carbon emissions factor for energy in your country or region.

Our In-use Energy Carbon Emissions Estimate is designed to assist customers in making informed purchasing decisions when comparing different Fisher & Paykel products. For example, a heat pump dryer typically has a lower In-use Energy Carbon Emissions Estimate than a vented dryer.

24/7

A PEACE OF MIND SALE
24 Hours 7 Days a Week Customer Support
T 1.888.936.7872 Wwww.fisherpaykel.com