Double DishDrawer™ Dishwasher, Sanitise

Series 7 | Contemporary

Stainless Steel

Wash one drawer while you load the other, with minimal bending and room in each drawer for full-size dinner plates.

- Six wash programs, as well as additional Quick wash, Sanitise and Extra Dry options
- Flexible racking allows you to customise internal shelves to suit your needs

DIMENSIONS

Height	**820 - 880mm**
Width	**599mm**
Depth	**573mm**

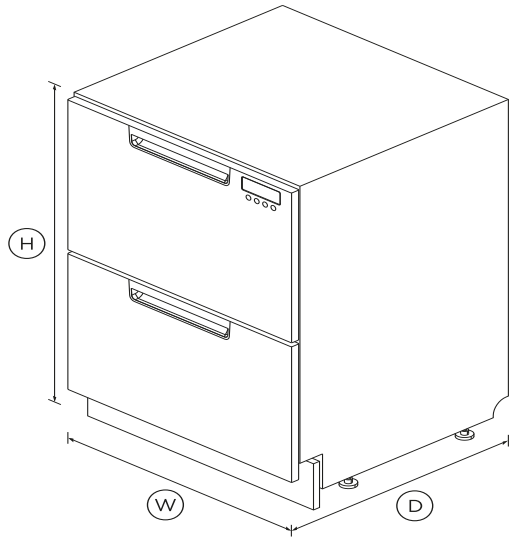

FEATURES & BENEFITS

Ease of use
DishDrawer™ Dishwashers are as easy to open and close as kitchen drawers and can be conveniently positioned at bench height for ease of loading and minimal bending. Flexible racking allows you to make adjustments to fit in a variety of dishes.

Independent wash
With the ability to use both drawers independently and select different wash programs the DishDrawer™ Dishwasher can wash everything from fine glass and crystal to heavily soiled pots and pans.

True half load
Each drawer holds a true half load for guilt-free small washes and fast turnaround of your dishes. Both drawers operate independently so different wash cycles can operate simultaneously to accommodate a variety of loads.

Seamless integration
DishDrawer™ Dishwashers are designed to match the Fisher & Paykel family of kitchen appliances, with matching handles, premium styling and quality materials for a stylish finish in your kitchen.

Quick, Sanitise and Extra Dry options
The Quick wash modifier delivers a faster wash while maintaining performance. The Sanitise option provides extra protection killing 99.9% of bacteria in the final rinse. The Extra Dry setting is perfect for plastic dishes.

Quiet performer
Running at a very low decibel rating, these DishDrawer™ Dishwashers do their job without making a fuss. The combination of intelligent technology and simple mechanics means greater reliability and excellent wash performance.

SPECIFICATIONS

Accessories

Cutlery basket	•
Kickstrip	•
Knife clip and multipurpose	•

Capacity and loading

Accommodates round plates	**280mm**
Adjustable height, foldable	•
Fold down tines	•

Pitch adjustable tines	•
Place settings	14

Consumption

Energy rating	2 ticks
Energy usage	136kWh/year
Water rating	2 ticks
Water usage (per wash cycle)	6.9L

Controls

Child lock	•
Electronic fault/Diagnostic	•
End of cycle beeps	•
Energy saving delay start	•
Rinse aid indicator light	•

Features

Fan assisted drying	•
Flow through detergent	•
Quiet operation	•
SmartDrive™ technology	•

Performance

Noise on standard cycle top	43dBA

Power requirements

Amperage	8.5A

Product dimensions

Depth	573mm
Height	820 - 880mm
Width	599mm

Warranty

Parts and labour	2 years

Wash Program Modifiers

Extra Dry	•
Quick	•
Sanitise	•
Wash modifiers	3

Wash Programs

Delicate	•
Eco	•
Fast	•
Heavy	•
Medium	•
Rinse	•
Wash programs	6

SKU	81587

The product dimensions and specifications in this page apply to the specific product and model. Under our policy of continuous improvement, these dimensions and specifications may change at any time. You should therefore check with Fisher & Paykel's Customer Care Centre to ensure this page correctly describes the model currently available. ? Fisher & Paykel Appliances Ltd 2020

24/7

A PEACE OF MIND SALE

24 Hours 7 Days a Week Customer Support

T +65 6741 0777 **W**www.fisherpaykel.com