# 10kg Series 11 Contemporary Heat Pump Dryer, Woolmark Blue

Series 11 | Heat Pump

White



A premium Heat Pump Dryer designed to adapt to every fabric and load. The glass control panel with vibrant 7" touchscreen delivers gentle, thorough, and reliable care for a wide range of fabrics.

- Optimal care for 15 fibre types, including Ramie and Hemp
- 3D Active Sense detects moisture deep into the load, even in bulky items or large loads
- Intelligent Temperature System maintains controlled, low temperatures for perfectly precise drying
- Woolmark Blue certified for hand-wash only woollens
- Connect SmartHQ™ for notifications, guides and extra functions

## DIMENSIONS

| | |
|---|---|
| Height | 850 mm |
| Width | 602 mm |
| Depth | 682 mm |

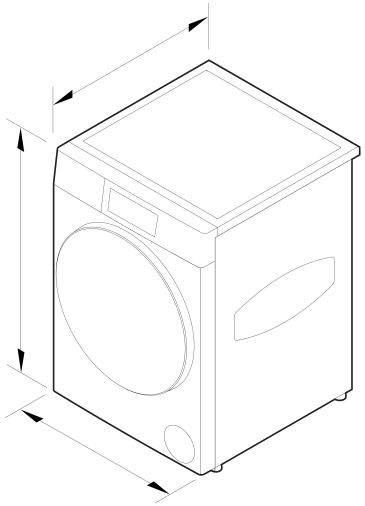

## FEATURES & BENEFITS

### OPTIMAL CARE FOR LUXURY FIBRES

Fisher & Paykel Series 11 Dryers are the pinnacle of Fabric Care, with intelligent drying that responds to the unique needs of every fibre. Finely tuned cycles care for synthetic fabrics like Nylon and Elastane plus natural fibres like Linen and Hemp, each dried at the temperature and rhythm best suited to their molecular structure and properties. Guided by the vibrant 7" touchscreen, advanced sensors and Heat Pump technology work in harmony to preserve softness, shape and quality with precision.

### ULTIMATE FABRIC CARE SOLUTIONS

Our most perfect pair yet, reimagined for modern living. A concealed handle, large glass door, machined control panel, and refined materials create a purity of form that balances luxury with lasting quality. A glass fascia and push-to-open dispenser offer seamless integration with cabinetry, whether stacked or side by side. Designed to complement in both form and function, our Front Loader Washer, Display-Free Heat Pump Dryer, and Fabric Care Cabinet bring visual harmony to the home, with the Dryer seamlessly controlled via the Washer's touchscreen.

### INTELLIGENT HEAT PUMP TECHNOLOGY

Our Intelligent Temperature System with Heat Pump Technology provides gentle care for natural fibres like Hemp. While naturally strong, Hemp requires special care to protect it from going brittle. Our variable speed compressor and Ultra Delicate Item Type reduces strain, using multi-directional drum movements and low-temperature drying at precisely 50C to dry perfectly while preserving Hemp's natural texture, colour and long-lasting strength.

### ADVANCED MOISTURE SENSING

Retain the softness, loft, and warmth of Down jackets with 3D Active Sense. By sensing moisture both on the surface and inside the load, the cycle is adjusted for gentle, even drying. Jackets dry with up to 17% more volume than air drying, protecting fine protein fibres from heat and friction while preserving structure and lasting warmth.

### GENTLE CARE FOR THE FINEST WOOL

Even the most delicate, hand-wash only woollens are safely dried with Woolmark Blue certified cycles. Wool fibres are fragile when wet, and heat can quickly alter their structure. Precisely controlled temperature and airflow gently care for each fibre, preserving softness, shape, and fit so garments emerge beautifully maintained and ready to wear.

### STEAM REFRESH

Gently refresh Hemp garments with Steam Refresh. Fully saturated Hemp fibres can swell and form creases in the fabric as it dries, but Steam Refresh temporarily relaxes the fibres, breaking hydrogen bonds and allowing the fabric to smooth out. By adding just the right amount of moisture, it helps reduce wrinkles and restore Hemp's natural drape, softness and fresh appearance.

### PROTECT LINEN FROM TANGLING

TangleProtect keeps Linen garments moving freely by alternating drum direction, preventing twisting or clumping that can cause uneven drying. Linen fibres absorb water easily, causing them to swell and collapse, which leads to creasing. The Linen cycle and full-reversing drum gently tumbles garments, reducing strain, reducing wrinkles, and preserving Linen's natural softness, texture and drape.

## SPECIFICATIONS

### Accessories (included)

| | |
|---|---|
| Drying rack | • |

### Capacity

| | |
|---|---|
| Total capacity | 10 kg |

### Connected Features

| | |
|---|---|
| Alerts and notifications | • |
| Education and onboarding | • |
| Initial software update for full feature set | • |
| Monitoring | • |
| Remote operation | • |
| Software updates | • |

### Consumption

| | |
|---|---|
| Energy rating | 10 star |
| Energy usage | 122kWh/year |
| In-use energy carbon emissions estimate | 11.0kgCO2e/year |

### Controls

| | |
|---|---|
| Adjustable alert beeps | • |
| Beeps on/off function | • |
| Interface type | 7" touchscreen |
| Screen brightness settings | • |

### Features

| | |
|---|---|
| Clean condenser filter reminder | • |
| Clean door lint filter reminder | • |
| Crease Free | • |
| Drain Hose | • |
| Drum light | • |
| Easy access lint filter | • |
| Easy clean condenser filter | • |
| End of cycle signal | • |
| Favourite cycle | Multiple |
| Front and back levelling feet | • |
| Iron ready alert | • |
| Keylock | • |
| No external venting | • |
| Push to open water tank | • |
| Removable water tank | • |
| Reversible door | • |
| Smart appliance | • |
| Stainless steel drum | • |
| Water tank full indicator | • |

### Performance

| | |
|---|---|
| 3D sensing technology | • |
| Auto sensing | • |
| Compressor type | Variable speed |
| Delay start | • |
| Dryness settings | 4 |
| Heat pump technology | • |
| Refrigerant type | R290 |
| Reverse tumbling | Full reverse tumbling |
| TangleProtect | • |
| Time dry | • |

### Product dimensions

| | |
|---|---|
| Depth | 682 mm |
| Height | 850 mm |
| Width | 602 mm |

| | |
|---|---|
| SKU | 93314 |

The product dimensions and specifications in this page apply to the specific product and model. Under our policy of continuous improvement, these dimensions and specifications may change at any time. You should therefore check with Fisher & Paykel's Customer Care Centre to ensure this page correctly describes the model currently available. © Fisher & Paykel Appliances Ltd 2020

Other product downloads available at fisherpaykel.com

- DWG
- DXF
- Energy Label
- Installation Guide - Dryer (English)
- Installation Guide - Side by Side (English)
- Installation Guide - Stacked (English)
- Performance Guide (English)
- Planning Guide - Fabric Care Solutions (English)
- Revit
- Rhino
- Introducing Fabric Care Solutions (English)
- Sketchup
- User Guide (English)

Where applicable:

All appliances use energy, and energy usage typically generates carbon emissions. **Fisher & Paykel Appliances' In-use Energy Carbon Emissions Estimate** indicates carbon emissions from a product's in-use energy. This is calculated either annually or per cycle, using the product's market-specific energy label energy consumption data multiplied by the carbon emissions factor for energy in your country or region.

Our In-use Energy Carbon Emissions Estimate is designed to assist customers in making informed purchasing decisions when comparing different Fisher & Paykel products. For example, a heat pump dryer typically has a lower In-use Energy Carbon Emissions Estimate than a vented dryer.




A PEACE OF MIND SALE
24 Hours 7 Days a Week Customer Support

T 0800 372 273 Wwww.fisherpaykel.com