60cm Series 9 Contemporary Compact Steam Oven

Series 9 | Minimal

Brushed Silver Glass



With its timeless and expressive design, this compact Steam oven offers method-led steam cooking.

- Create perfect results with precise cooking methods, including Steam and Sous Vide, via the large 6.8” touchscreen
- Simple maintenance with a Dry Cycle to remove moisture inside the oven after steaming
- Compact 55L total capacity, designed to match our Contemporary style appliances for the ultimate kitchen solution
- Monitor cooking progress remotely with Wi-Fi and Haier Smart Home app

DIMENSIONS

Height	458 mm
Width	596 mm
Depth	565 mm

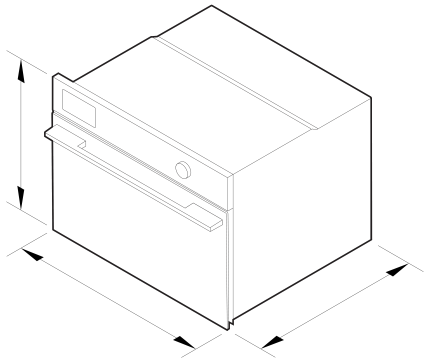

FEATURES & BENEFITS

Exceptional Performance

Offering a range of Steam cooking methods, this oven provides exceptional precision and versatility for healthy, flavourful cooking. Guided by a deep understanding of the science of cooking, we've mastered the balance of heat and humidity to deliver specialised steam cooking and bring out the full potential of every ingredient. The compact 55L capacity, four shelf positions, and full-extension sliding shelf make family meals and entertaining effortless.

Enhance Flavour, Preserve Nutrients

Cooking with Steam creates a gentle, precisely controlled environment that preserves delicate textures. For a main course that delights the senses, Salmon proteins stay relaxed, keeping fillets glossy and full of natural flavour, while the cell walls of Asparagus are softened just enough to retain a crisp bite and vibrant colour. To finish, Crème Caramel is surrounded with even heat for a smooth, silky texture and uniform colour.

Considered Design

Every detail of our Contemporary style appliances has been meticulously designed. With a brushed silver finish, round bar handle, and intuitive 6.8” touchscreen, every element aligns beautifully. Create your ultimate kitchen solution with our range of ovens and companion products, creating a seamless and cohesive look when installed side by side or stacked — with perimeter gaps as small as 2 mm. The perfect pairing of style and precision for your kitchen.

Effortless Cleaning

With Steam Clean, gentle steam lifts away stubborn spills, while the Dry Cycle efficiently removes residual moisture, leaving the oven ready for your next dish. The redesigned door showcases remarkable engineering — a gentle push lifts the glass out smoothly, making deep cleaning simple and satisfying.

Multi-Functional Accessories

Thoughtfully designed accessories expand your cooking possibilities. The three Steam Dishes cater for everything from delicate vegetables to steaming full meals, while the Wired Temperature Sensor helps achieve precise cooking results by monitoring food temperature in real time.

Connect and Control

Connected cooking brings intelligence and ease to your kitchen. With Wi-Fi and the Haier Smart Home app, you can monitor and control your oven remotely, receive real time notifications, and access helpful guidance. Voice control with Xiao You offers hands free convenience[1] while our temperature sensors provide guidance to help you achieve perfect results.

Engineered for Life

Built for enduring performance, our Ovens undergo intensive testing equivalent to 7,300 hours or 20 years of real-world use, delivering durability you can rely on.

SPECIFICATIONS

Accessories (included)

Descale solution	2 sachets, Part 580925
Full extension sliding shelves	1
Large steam dish	1
Perforated large steam dish	1
Perforated small steam dish	1
Wire shelf	1
Wired temperature sensor	1

Capacity

Total capacity	55 L
Usable capacity	45 L
Water tank capacity	670ml

Cleaning

Acid resistant graphite enamel	•
Descale cycle	•
Drying cycle	•
Removable oven door	•
Removable oven door inner glass	•
Removable side ladders	•
Removable water tank	•
Steam clean (oven)	•

Connected Features

Alerts and notifications	•
Education and onboarding	•
Monitoring	•
Remote operation	•
Software updates	•

Controls

Adjustable audio and display settings	•
Audio feedback	•
Automatic cooking/minute timer	•
Automatic pre-set temperatures	•
Celsius/Fahrenheit temperature	•
Delay start	•
Electronic oven control	•
Guided touchscreen cooking	•
Interface type	6.8" touchscreen with dial
Internal Light	•
Intuitive touchscreen display	•
Multi-language display	true
Smart appliance	•
Soft close doors	•
Wireless temperature sensor compatible	•

Functions

Number of functions	3
Sous vide	•
Steam	•
Steam regenerate	•

Performance

ActiveVent™ system	•
AeroTech™ technology	•
Automatic rapid pre-heat	•
Method Cooking	•
Steam Assist	•
SteamTechnology	•
Temperature range	35°C - 100°C

Power requirements

Connection type	Flex cord
Dedicated circuit	16 A
Power cord length	1.5m
Rated power	1900-2200 W
Supply frequency	50 Hz
Supply voltage	220-240 V

Product dimensions

Depth	565 mm
Height	458 mm
Width	596 mm

Safety

Control panel key lock	•

SKU	86053

The product dimensions and specifications in this page apply to the specific product and model. Under our policy of continuous improvement, these dimensions and specifications may change at any time. You should therefore check with Fisher & Paykel's Customer Care Centre to ensure this page correctly describes the model currently available. © Fisher & Paykel Appliances Ltd 2020

Other product downloads available at fisherpaykel.com

- Care & Maintenance (Chinese)
- Care & Maintenance (English)
- First Use (English)
- First Use (Chinese)
- Installation Considerations (English, Chinese)
- Installation Guide (English)
- Installation Guide (Chinese)
- Planning Guide - 60cm Series 9 & 11 Contemporary (English)
- Planning Guide - 60cm Series 9 & 11 Contemporary (Chinese)
- Restriction of the Use of Hazardous Substances (Chinese)
- Safety & Warnings (English)
- Safety & Warnings (Chinese)

Where applicable:

All appliances use energy, and energy usage typically generates carbon emissions. **Fisher & Paykel Appliances' In-use Energy Carbon Emissions Estimate** indicates carbon emissions from a product's in-use energy. This is calculated either annually or per cycle, using the product's market-specific energy label energy consumption data multiplied by the carbon emissions factor for energy in your country or region.

Our In-use Energy Carbon Emissions Estimate is designed to assist customers in making informed purchasing decisions when comparing different Fisher & Paykel products. For example, a heat pump dryer typically has a lower In-use Energy Carbon Emissions Estimate than a vented dryer.