# 60cm Series 9 Minimal Compact Combi-Microwave Oven

Series 9 | Minimal

Black



A flexible appliance that pairs the speed of microwave cooking with oven technology, which can crisp and brown as it cooks.

- 37L total capacity
- Nine cooking functions including Fan Forced, Fan Grill & Defrost
- Use the optional trim kit to integrate this microwave with your cabinetry
- Part of our suite of companion products, designed to match aesthetically for flexible configurations

## DIMENSIONS

| | |
|---|---|
| Height | 458 mm |
| Width | 596 mm |
| Depth | 562 mm |

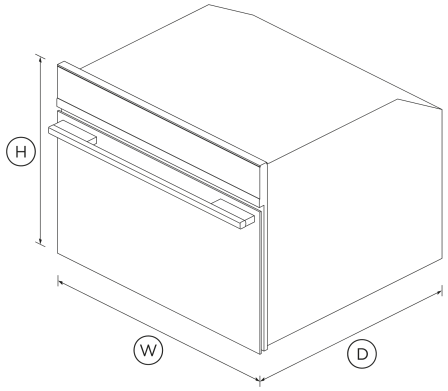


## FEATURES & BENEFITS

### Sized To Suit

A compact 46cm height means this Combination Microwave Oven can be placed almost anywhere. The companion products share the same dimensions and can be installed in multiple configurations to suit your kitchen design and preference.

### Cooking Flexibility

Choice of nine cooking modes including Fan Forced and Grill giving you the best of microwave and convection oven technology.

### Easy To Use

The intuitive touch display shows you all the information you need, allowing you to easily program in your desired cooking mode and duration.

### Beauty Of Choice

With the choice of a stylish stainless steel or elegant black trim, our companion products help you achieve a coherent kitchen aesthetic that suits your design style.

### Easy Cleaning

This Combination Microwave Oven has formed side racks and a stainless steel interior that are easy to clean.

### Safe & Sound

The CoolTouch door is safe to touch from the outside, protecting your hands and the surrounding cabinetry.

## SPECIFICATIONS

### Accessories (included)

| | |
|---|---|
| Baking pan | 1 |
| Glass turntable | 1 |
| Wire shelf | 1 |

### Accessories (sold separately)

| | |
|---|---|
| Optional 76cm/30" trim kit | Part 81940 |
| Optional lower trim kit | Part 81622 (478mm) |

### Capacity

| | |
|---|---|
| Shelf positions | 3 |
| Total capacity | 37 L |
| Usable capacity | 33 L |

### Cleaning

| | |
|---|---|
| Easy clean stainless steel interior | • |
| Easy to clean formed side racks | • |

### Consumption

| | |
|---|---|
| Microwave energy consumption | 1.65 kWh |

### Controls

| | |
|---|---|
| Audio feedback | • |
| Automatic cooking/minute timer | • |
| Celsius/Fahrenheit temperature | • |
| Electronic capacitive touch controls | • |
| Electronic oven control | • |
| Intuitive touchscreen display | • |
| Multi-language display | UK English |

### Functions

| | |
|---|---|
| Defrost by time | • |
| Defrost by weight | • |
| Fan forced | • |
| Fan grill | • |
| Grill | • |
| Microwave + grill | • |
| Microwave + ring | • |
| Microwave cooking | • |
| Number of functions | 9 |
| Ring + grill | • |

### Performance

| | |
|---|---|
| Grill power | 1500 W |
| Microwave power | 900 W |
| Microwave power levels | 6 |

### Power requirements

| | |
|---|---|
| Supply frequency | 50 Hz |
| Supply voltage | 220-240 V |

### Product dimensions

| | |
|---|---|
| Depth | 562 mm |
| Height | 458 mm |
| Width | 596 mm |

### Safety

| | |
|---|---|
| Control panel key lock | • |
| CoolTouch door | • |

| | |
|---|---|
| SKU | 81935 |

The product dimensions and specifications in this page apply to the specific product and model. Under our policy of continuous improvement, these dimensions and specifications may change at any time. You should therefore check with Fisher & Paykel's Customer Care Centre to ensure this page correctly describes the model currently available. © Fisher & Paykel Appliances Ltd 2020

**Other product downloads available at fisherpaykel.com**

- DXF
- Archicad
- Archicad - 600mm Trim
- Archicad - 760mm Trim
- Data Sheet (English)
- DWG
- Installation Guide (English)
- Installation Guide (Chinese)
- Revit
- Revit - 600mm Trim
- Revit - 760mm Trim
- Rhino
- Rhino - 600mm Trim
- Rhino - 760mm Trim
- Restriction of the Use of Hazardous Substances (Chinese)
- Restriction of the Use of Hazardous Substances (Chinese)
- SketchUp
- SketchUp - 600mm Trim
- SketchUp - 760mm Trim
- User Guide (English)
- User Guide (Chinese)

**Where applicable:**

All appliances use energy, and energy usage typically generates carbon emissions. **Fisher & Paykel Appliances' In-use Energy Carbon Emissions Estimate** indicates carbon emissions from a product's in-use energy. This is calculated either annually or per cycle, using the product's market-specific energy label energy consumption data multiplied by the carbon emissions factor for energy in your country or region.

Our In-use Energy Carbon Emissions Estimate is designed to assist customers in making informed purchasing decisions when comparing different Fisher & Paykel products. For example, a heat pump dryer typically has a lower In-use Energy Carbon Emissions Estimate than a vented dryer.