Series 9, Contemporary Double DishDrawer Dishwasher

Series 9 | Contemporary

Stainless Steel



Wash one drawer while you load the other, with minimal bending and room in each drawer for full-size dinner plates.

- Six wash programs, as well as additional Quick wash, Sanitise and Extra Dry options
- Flexible racking allows you to customise internal shelves to suit your needs

DIMENSIONS

Height	820 - 880 mm
Width	599 mm
Depth	573 mm

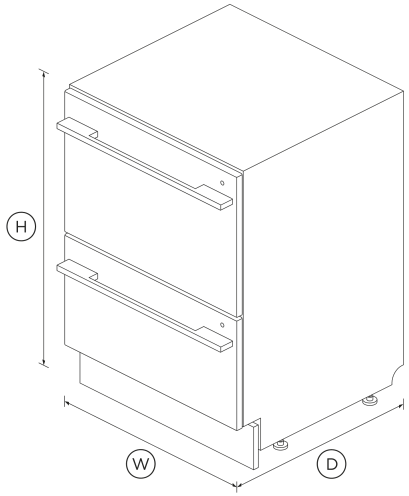

FEATURES & BENEFITS

Ease Of Use

DishDrawer™ Dishwashers are as easy to open and close as kitchen drawers and can be conveniently positioned at bench height for ease of loading and minimal bending. Flexible racking allows you to make adjustments to fit in a variety of dishes.

Independent Wash

With the ability to use both drawers independently and select different wash programs, the DishDrawer™ Dishwasher can wash everything from fine glass and crystal to heavily soiled pots and pans.

True Half Load

Each drawer holds a true half load for small washes and fast turnaround of your dishes. Both drawers operate independently so different wash cycles can run simultaneously to accommodate a variety of loads.

Seamless Integration

DishDrawer™ Dishwashers are designed to match the Fisher & Paykel family of kitchen appliances, with matching handles, premium styling and quality materials for a stylish finish in your kitchen.

Quick, Sanitise and Extra Dry options

The Quick wash modifier delivers a faster wash while maintaining performance. The Sanitise option provides extra protection, killing 99.9% of bacteria* in the final rinse. The Extra Dry setting is perfect for plastic dishes. *Certified to NSF/ANSI Standard 184

Quiet Performer

Running at a very low decibel rating, these DishDrawer™ Dishwashers do their job without making a fuss. The combination of intelligent technology and simple mechanics means greater reliability and excellent wash performance.

SPECIFICATIONS

Accessories (included)

Cutlery basket	•
Kickstrip	true
Knife clip and multipurpose clip	•

Capacity and loading

Accommodates round plates up to	280mm
Adjustable height, foldable cupracks	•
Fold down tines	•
Pitch adjustable tines	•
Place settings	14
Place settings	14
Place settings per drawer	7

Connected Features

Alerts and notifications	•
Cyber security updates until	04 / 03 / 2028
Education and onboarding	•
Monitoring	•
Software updates	•

Consumption

Energy rating	3.5 star
Energy usage	136kWh/year per drawer
In-use energy carbon emissions estimate	83.0kgCO2e/year per drawer
Water consumption (per wash cycle)	6.9L per drawer
Water rating	4.5 star (WELS)

Controls

End of cycle beeps	•
Energy saving delay start option of up to 12 hours	•
Internal wash selector	•
Keylock	•
Rinse aid indicator light	•
Smart appliance	•

Features

Fan assisted drying	•
Flood protection	•
Flow through detergent dispenser	•
Quiet operation	•
SmartDrive™ technology	•

Performance

Noise on standard cycle top drawer	42 dBA

Power requirements

Dedicated Circuit (A)	10A
Supply frequency	50 Hz
Voltage	220 - 240V

Product dimensions

Depth	573 mm
Height	820 - 880 mm
Width	599 mm

Wash Program Modifiers

Extra Dry	•
Quick	•
Sanitise	•
Wash modifiers	3

Wash Programs

Delicate	•
Eco	•
Fast	•
Heavy	•
Medium	•
Rinse	•
Wash programs	6

Water connection

Water pressure	30kPa - 1000 kPa
Water supply	3/4" BSP (20mm) Connector Water Inlet Hose

SKU	82323

The product dimensions and specifications in this page apply to the specific product and model. Under our policy of continuous improvement, these dimensions and specifications may change at any time. You should therefore check with Fisher & Paykel's Customer Care Centre to ensure this page correctly describes the model currently available. © Fisher & Paykel Appliances Ltd 2020

Other product downloads available at fisherpaykel.com

- DXF
- Care & Maintenance (English)
- DWG
- Energy Label
- First Use (English)
- Installation Guide (English)
- Revit
- Rhino
- SketchUp
- Wash Program Data (English)
- Installation Video

Where applicable:

All appliances use energy, and energy usage typically generates carbon emissions. **Fisher & Paykel Appliances' In-use Energy Carbon Emissions Estimate** indicates carbon emissions from a product's in-use energy. This is calculated either annually or per cycle, using the product's market-specific energy label energy consumption data multiplied by the carbon emissions factor for energy in your country or region.

Our In-use Energy Carbon Emissions Estimate is designed to assist customers in making informed purchasing decisions when comparing different Fisher & Paykel products. For example, a heat pump dryer typically has a lower In-use Energy Carbon Emissions Estimate than a vented dryer.



A PEACE OF MIND SALE
24 Hours 7 Days a Week Customer Support

T 1300 650 590 Wwww.fisherpaykel.com