Integrated CoolDrawer™ Multi-temperature Drawer

Series 9 | Integrated

Panel Ready

Use your CoolDrawer™ as a refrigerator, pantry or freezer with the push of a button. Customise with cabinetry or choose our stainless steel panel (available separately).

- Variable Temperature Zone lets you change between five different food modes – fridge, freezer, pantry, chill and wine
- Customise with your own kitchen cabinetry or purchase our stainless steel door panel accessory

DIMENSIONS

Height	**640mm**
Width	**855mm**
Depth	**557mm**

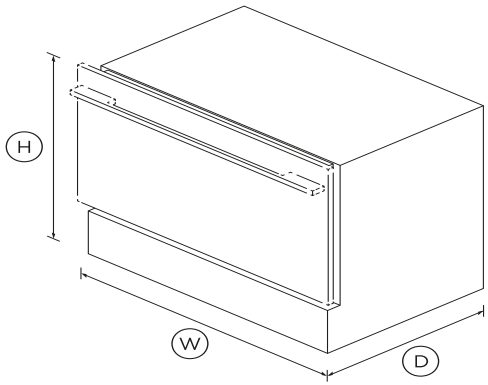

FEATURES & BENEFITS

FRIDGE

The ideal storage for most foods such as fruit, vegetables, dairy products and drinks. The compact upper storage tray is a perfect place for sensitive foods while the tall bin is ideal for large bottles and containers.

Pantry

Designed for foods that require a cool, dark place for storage such as tropical fruits, tomatoes and cereals.

FREEZER

Ideal for general frozen food storage with the added flexibility of three freezer functions - bottle chill, fast freeze and deep freeze. Freezer mode is set at -18°C for longer term storage of frozen items.

Wine

Wine Mode is ideal for long term storage of all wine at 12°C. It also offers short term storage at 7°C for white wine and 15°C for red wine.

CHILL

Chill Mode sets the compartment to a temperature ideal for highly perishable meats, poultry and seafood. Chill Mode sets the compartment at -0.5°C, just above the freezing temperature for meat.

SPECIFICATIONS

Accessories (sold separately)

Handle kit Contemporary	**AHS-RB90S**
Handle kit Contemporary	**AHD5RD90S**
Handle kit Contemporary	**AHD5RD90SB**
Handle kit Contemporary	**AHD3RB90S**

Capacity

Total net volume	**80L**
Volume	**80L**

Consumption

Energy rating	**4 ticks**

Features

Door alarm	•

Full extension runners	•
LED lighting	•
SmartTouch control panel	•
Spill proof removable bins	•
Variable temperature control	•

Performance

ActiveSmart™ Foodcare	•
Noise emissions	**39dBA**
Noise emissions class	**C**

Product dimensions

Depth	**557mm**
Height	**640mm**
Width	**855mm**

Warranty

Parts and labour	**2 years**
Sealed system parts only	**5 years**

SKU	25671

The product dimensions and specifications in this page apply to the specific product and model. Under our policy of continuous improvement, these dimensions and specifications may change at any time. You should therefore check with Fisher & Paykel's Customer Care Centre to ensure this page correctly describes the model currently available. ? Fisher & Paykel Appliances Ltd 2020

Other product downloads available at fisherpaykel.com

- User Guide
- Service & Warranty
- Installation Guide - Framed Cabinetry
- Installation Guide - Frameless Cabinetry
- Data Sheet Integrated Cool Drawer

24/7

A PEACE OF MIND SALE

24 Hours 7 Days a Week Customer Support

T +65 6741 0777 **W**www.fisherpaykel.com