30" Series 9 Minimal Handleless Compact Convection-Speed Oven

Series 9 | Minimal

Grey Glass



Elegant and handleless, this compact oven combines the speed of microwave and the versatility of convection with method-led cooking.

- Create perfect results with precise cooking methods, including Microwave and Broil, via the large 6.8” touchscreen
- Combi-Microwave cooking provides fast, even results, with a wired temperature sensor for ultimate control
- Designed to match our Minimal Handleless style appliances, for the ultimate kitchen solution
- With WiFi and the SmartHQ™ app, you can remotely monitor cooking progress and control key functions

DIMENSIONS

Height	18 "
Width	29 7/8 "
Depth	22 1/4 "

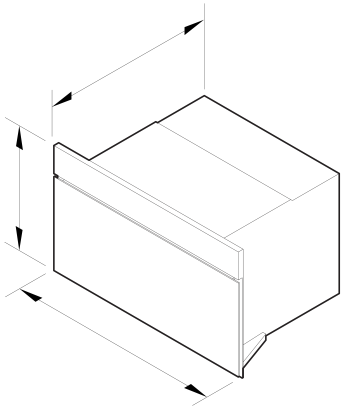

FEATURES & BENEFITS

EXCEPTIONAL PERFORMANCE

Offering Microwave, Convection, or a combination of both, this oven provides exceptional versatility for every cooking style. Guided by a deep understanding of the Science of Cooking, we’ve mastered the balance of heat, humidity and airflow to deliver precise cooking methods, from Microwave to Broil, that bring out the full potential of every ingredient. With ActiveVent™ to manage humidity levels, it delivers consistently perfect results in every dish.

EFFICIENT AND DELICIOUS

Microwave Assist combines the speed of microwave energy with the power of convection heat to accelerate cooking and enhance the development of colour. Microwaves gently warm from within, allowing food to cook evenly while retaining its natural moisture. A 3.3lb Chicken roasts 30-40% faster compared to convection alone, with a golden and crisp skin and succulent meat beneath, while root vegetables caramelise beautifully, tender inside with deep and concentrated flavour.

CONSIDERED DESIGN

Every detail of our Minimal style appliances has been meticulously designed. With a grey glass finish, handleless design, and intuitive 6.8” touchscreen, every element aligns beautifully. Create your ultimate kitchen solution with our range of ovens and companion products, creating a seamless and cohesive look when installed side by side or stacked — with perimeter gaps as small as 1/16". The perfect pairing of style and precision for your kitchen.

MASTERY OF TEMPERATURE

Whether you want to Microwave Popcorn, Roast a Chicken or Melt Chocolate, each of our precise cooking methods has been carefully calibrated with the optimal combination of heat, temperature and microwave energy to cook evenly while preserving texture and flavour. With additional guidance for using the Temperature Sensor, it brings true mastery of temperature to every dish.

QUICKSTART FOR EASY OPERATION

For everyday convenience in an instant, Quickstart Microwave delivers fast, precise results. Simply select the duration and power level, and it’s ready to go. Intuitive and effortless, it combines the speed of microwave cooking with the performance and reliability of a premium appliance.

GENEROUS CAPACITY

The rectangular cavity and absence of a turntable make it easy to cook large dishes, maximising the oven’s full 1.7 cu ft capacity. Microwave-safe metal side ladders provide even cooking across all levels, giving you flexibility and consistent results every time.

CONNECT AND CONTROL

Connected cooking brings intelligence and ease to your kitchen. With WiFi and the SmartHQ™ app, you can monitor and control your oven remotely, receive real time notifications, and access helpful guidance. Software updates are delivered through the app to keep your appliance current with the latest features and functionality. Voice control with Google Assistant offers hands free convenience — simply speak to a connected device to open the door. For precise and confident cooking, our temperature sensors provide guidance to help you achieve perfect results.

SPECIFICATIONS

Accessories (included)

Broil rack	1
Chrome side ladders	2
Glass tray	1
Handleless door key	1
Step down wire shelf	1
Wire shelf	1
Wired temperature sensor	1

Capacity

Shelf positions	4
Total capacity	1.7 cu ft
Usable capacity	1.3 cu ft

Cleaning

Acid resistant graphite enamel	•
Drying cycle	•
Easy to clean interior	•
Removable side ladders	•

Connected Features

Alerts and notifications	•
Education and onboarding	•
Monitoring	•
Remote operation	•
Software updates	•

Controls

Adjustable audio and display settings	•
Audio feedback	•
Automatic cooking/minute timer	•
Automatic pre-set temperatures	•
Celsius/Fahrenheit temperature	•
Delay start	•
Guided touchscreen cooking	•
Handle-free design	•
Internal Light	•
Intuitive touchscreen display	•
Microwave timer	•
Multi-language display	true
Sabbath mode with Star K certification	•
Smart appliance	•
Temperature sensor	•
True convection oven	•
Voice control	•

Functions

Aero Broil	•
Aero Broil + Microwave	•
Aero™ Bake	•
Air fry	•
Bake	•
Broil	•
Broil + microwave	•
Classic fan	•
Dehydrate	•
Melt	•
Microwave	•
Number of functions	17
Roast	•
Roast + microwave	•
Slow cook	•
True Aero	•
True aero + microwave	•
Vent bake	•

Performance

ActiveVent™ system	•
AeroTech™ technology	•
Automatic rapid pre-heat	•
Method Cooking	•

Power requirements

Amperage	20 A
Supply frequency	60 Hz
Supply voltage	208 / 240 V

Product dimensions

Depth	22 1/4 "
Height	18 "
Width	29 7/8 "

Safety

Control panel key lock	•

SKU	84982

The product dimensions and specifications in this page apply to the specific product and model. Under our policy of continuous improvement, these dimensions and specifications may change at any time. You should therefore check with Fisher & Paykel's Customer Care Centre to ensure this page correctly describes the model currently available. © Fisher & Paykel Appliances Ltd 2020

Other product downloads available at fisherpaykel.com

- DWG
- DXF
- First Use (English)
- First Use (Spanish)
- First Use (Canadian French)
- Installation Considerations (English, Canadian French, Spanish)
- Installation Considerations
- Installation Considerations
- Installation Considerations
- Installation Guide (English)
- Installation Guide (Canadian French)
- Installation Guide (Spanish)
- Planning Guide - 30" Minimal Handleless (English)
- Planning Guide - 30" Minimal Handleless (Canadian French)
- Planning Guide - 30" Minimal Handleless (Spanish)
- Revit
- Rhino
- Right To Repair Declaration (English, Canadian French)
- Safety & Warnings (English / French / Spanish)
- Safety & Warnings (Canadian French)
- Safety & Warnings (Spanish)
- SketchUp

Where applicable:

All appliances use energy, and energy usage typically generates carbon emissions. **Fisher & Paykel Appliances' In-use Energy Carbon Emissions Estimate** indicates carbon emissions from a product's in-use energy. This is calculated either annually or per cycle, using the product's market-specific energy label energy consumption data multiplied by the carbon emissions factor for energy in your country or region.

Our In-use Energy Carbon Emissions Estimate is designed to assist customers in making informed purchasing decisions when comparing different Fisher & Paykel products. For example, a heat pump dryer typically has a lower In-use Energy Carbon Emissions Estimate than a vented dryer.

24/7

A PEACE OF MIND SALE
24 Hours 7 Days a Week Customer Support

T 1.888.936.7872 Wwww.fisherpaykel.com