381L Series 5 Refrigerator Freezer

Series 5 | Contemporary

Stainless Steel | Right Hinge

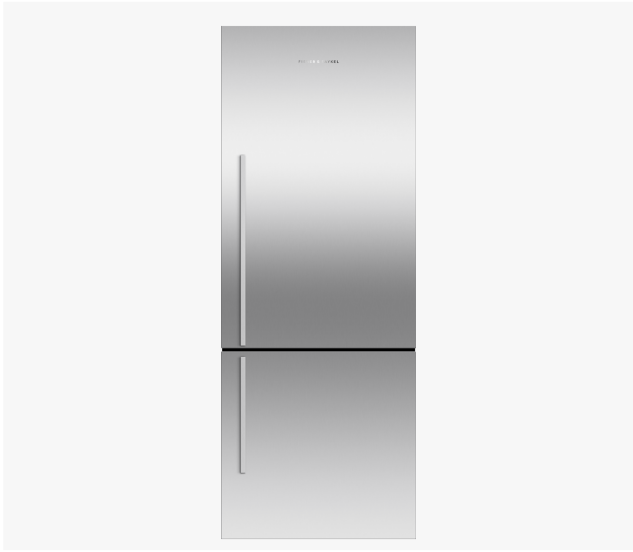

With generous storage and stylish stainless steel design for a timeless look. Perfect for smaller kitchens.

- ActiveSmart technology to help keep food fresher for longer by stopping temperature fluctuation
- Spacious bottom freezer with easy-slide internal drawers to separate storage
- Choose which side you'd like your door hinge on to suit your kitchen layout

DIMENSIONS

Height	1715 mm
Width	635 mm
Depth	695 mm

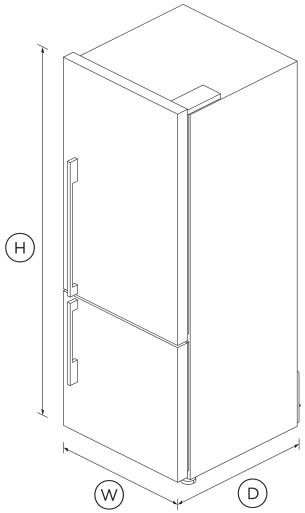

FEATURES & BENEFITS

Activesmart Foodcare

Every time you open your refrigerator, the temperature around your food changes. ActiveSmart foodcare adjusts airflow to create a stable temperature, helping your food stay fresher for longer.

Easy Cleaning

No more permanent dirty marks with our EZKleen feature for stainless steel refrigerators. Anti-fingerprint coating means you simply wipe clean any marks. Spill-safe secure glass shelves easily capture any drips or leaks.

Design Quality

Our refrigerators are designed and built using quality materials. We use real stainless steel, and solid glass for shelving as well as in our wine cabinet doors.

Clever Energy

Your refrigerator adapts to daily use by cooling and defrosting only when needed. This means it uses the energy it needs without compromising on food care.

Humidity Control

Your fruit and veges need different environments. The humidity control slides in each storage bin create a perfect microclimate for each, which helps keep them fresher for longer.

SPECIFICATIONS

Accessories (sold separately)

Joiner kit	819264

Capacity

Total gross capacity	414 L
Total net volume	363L
Volume freezer	112 L
Volume refrigerator	269 L

Consumption

Energy rating	Grade 3

Features

Adjustable door shelves	4
Adjustable glass shelves	4
Covered door shelves	2
Door alarm	•

Fruit and vegetable bins	2
SmartTouch control panel	•
Stackable bottle holders	2

Freezer Features

Bottle chill	•
Door alarm	•
Fast freeze	•
Freezer bins	3

Performance

ActiveSmart™ Foodcare	•
Adaptive defrost	•
Frost free freezer	•
Humidity control system	•
Sabbath mode	•

Power requirements

Connection power	178W
Rated current	10 A
Supply frequency	50 Hz
Supply voltage	220 - 240 V

Product dimensions

Depth	695 mm
Depth (including handles)	730 mm
Height	1715 mm
Minimum air clearance - at rear	30 mm
Minimum air clearance - each side	20 mm
Minimum air clearance - on top	50 mm
Width	635 mm

SKU 25517

The product dimensions and specifications in this page apply to the specific product and model. Under our policy of continuous improvement, these dimensions and specifications may change at any time. You should therefore check with Fisher & Paykel's Customer Care Centre to ensure this page correctly describes the model currently available. © Fisher & Paykel Appliances Ltd 2020

Other product downloads available at fisherpaykel.com

- Energy Label
- Installation Guide (Chinese)
- Installation Guide (English)
- Revit
- Restriction of the Use of Hazardous Substances (Chinese)
- User Guide (Chinese)
- User Guide (English)
- Installation & User Guide (English)

Where applicable:

All appliances use energy, and energy usage typically generates carbon emissions. **Fisher & Paykel Appliances' In-use Energy Carbon Emissions Estimate** indicates carbon emissions from a product's in-use energy. This is calculated either annually or per cycle, using the product's market-specific energy label energy consumption data multiplied by the carbon emissions factor for energy in your country or region.

Our In-use Energy Carbon Emissions Estimate is designed to assist customers in making informed purchasing decisions when comparing different Fisher & Paykel products. For example, a heat pump dryer typically has a lower In-use Energy Carbon Emissions Estimate than a vented dryer.