60cm Series 7 Contemporary Pyrolytic Oven, 9 Function

Series 7 | Contemporary

Stainless Steel



With beautiful Contemporary styling and generous capacity, this built-in oven helps to ensures that every dish you create is cooked to perfection.

- 85L total capacity with nine oven functions including Pizza Bake and Roast
- Moisture level control with ActiveVent technology
- Pyrolytic self-cleaning function breaks down food residue for an easy clean
- Wi-Fi enabled for remote control and notifications through the SmartHQ™ app

DIMENSIONS

Height	598 mm
Width	596 mm
Depth	565 mm

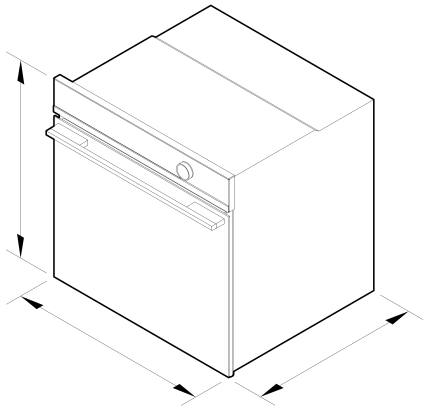

FEATURES & BENEFITS

Multi-Function Flexibility
Each function has been perfected to ensure that no matter what you're cooking, you've got the right heat to match. This built-in oven has nine functions including Pizza Bake and Roast, allowing you to use a variety of cooking styles.

Generous Capacity
With a generous 85L total capacity, you can create several perfectly cooked dishes at once using multiple shelves.

Cook With Confidence
The intuitive 2.4" screen provides an intuitive guided cooking experience that helps to deliver perfect results, whether you've been cooking all your life or are just starting out. Cook by food type and allow your oven to guide you through steps, or change temperature and heat type automatically, depending on your selection.

Exceptional performance
Our unique cooking technologies were developed to deliver perfect results. ActiveVent ensures optimised moisture levels, while AeroTech™ circulates heat evenly for a consistent temperature.

Self-Cleaning
Pyrolytic self-clean breaks down food residue at a very high temperature, leaving a light ash that's easily removed with a damp cloth.

Design Freedom
Designed to fit seamlessly into your kitchen, this built-in oven features premium materials and detailing to support a cohesive, considered kitchen design.

Safe And Sound
The CoolTouch door features triple glazing and a cooling system that ensures it's safe to touch from the outside – protecting both your hands and the surrounding cabinetry.

SPECIFICATIONS

Accessories (included)

Chromed shelf runners	•
Flat brushed baking tray	1
Roasting dish	1
Step down wire shelf	1
Telescopic sliding runners	1 set
Wire shelf	1

Capacity

Shelf positions	6
Total capacity	85 L
Usable capacity	72 L

Cleaning

Acid resistant graphite enamel	•
Pyrolytic self-clean	•
Removable oven door	•
Removable oven door inner glass	•
Removable side ladders	•

Controls

Adjustable audio and display settings	•
Automatic cooking/minute timer	•
Automatic pre-set temperatures	•
Celsius/Fahrenheit temperature	•
Certified Sabbath mode	•
Delay start	•
Electronic clock	•
Electronic oven control	•
Internal Light	•
Multi-language display	UK English
Soft close doors	•
True convection oven	•
Turned stainless steel dials with illuminated halos	•

Functions

Bake	•
Fan bake	•
Fan forced	•
Fan grill	•
Grill	•
Number of functions	9
Pizza bake	•
Pyrolytic self-clean (Function)	•
Roast	•
Vent bake	•

Performance

ActiveVent™ system	•
AeroTech™ technology	•
Automatic rapid pre-heat	•
Temperature range	50°C - 280°C
Whisper quiet cooking	•

Power requirements

Amperage	15 A
Rated current	15 A
Supply frequency	50 Hz
Supply voltage	220-240 V

Product dimensions

Depth	565 mm
Height	598 mm
Width	596 mm

Safety

Balanced oven door	•
Catalytic venting system	•
Control panel key lock	•
CoolTouch door	•
Non-tip shelves	•
Safety thermostat	•

SKU 82567

The product dimensions and specifications in this page apply to the specific product and model. Under our policy of continuous improvement, these dimensions and specifications may change at any time. You should therefore check with Fisher & Paykel's Customer Care Centre to ensure this page correctly describes the model currently available. © Fisher & Paykel Appliances Ltd 2020

Other product downloads available at fisherpaykel.com

- DXF
- Archicad
- DWG
- Installation Guide (English)
- Installation Guide (Chinese)
- Planning Guide (English)
- Planning Guide - 60cm Ovens (Chinese)
- Revit
- Rhino
- Restriction of the Use of Hazardous Substances (Chinese)
- SketchUp
- User Guide (English)
- User Guide (Chinese)

Where applicable:

All appliances use energy, and energy usage typically generates carbon emissions. **Fisher & Paykel Appliances' In-use Energy Carbon Emissions Estimate** indicates carbon emissions from a product's in-use energy. This is calculated either annually or per cycle, using the product's market-specific energy label energy consumption data multiplied by the carbon emissions factor for energy in your country or region.

Our In-use Energy Carbon Emissions Estimate is designed to assist customers in making informed purchasing decisions when comparing different Fisher & Paykel products. For example, a heat pump dryer typically has a lower In-use Energy Carbon Emissions Estimate than a vented dryer.