24" Series 9 Minimal Handleless Self-Cleaning Oven

Series 9 | Minimal

Black Glass



Achieve perfect results with every dish using this Minimal style, handleless oven featuring an intuitive touchscreen for guided cooking.

- Handleless oven design ensures smooth, uninterrupted lines in your kitchen cabinetry for a cohesive look
- Guided touchscreen cooking offers helpful tips for different food types as well as full recipes
- 3 cu ft total capacity with 16 oven functions including Pastry Bake, Roast, and Air Fry
- Pyrolytic self-cleaning function breaks down food residue for an easy clean

DIMENSIONS

Height	23 9/16 "
Width	23 7/16 "
Depth	22 1/4 "

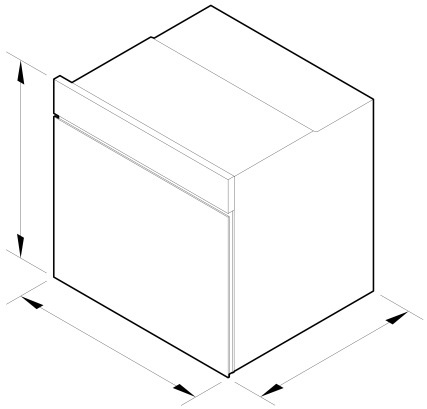

FEATURES & BENEFITS

Handleless Design
Effortlessly open and close your oven with a gentle press of a button, ensuring convenience and smooth operation in the kitchen. Moving away from traditional oven doors, this model is an ideal match for kitchens with a continuous, handle-free design, ensuring a seamless flow across the cabinetry.

Hands-Free Control
Experience the ultimate kitchen convenience with the SmartHQ™ app's voice-activated oven door. Connect your SmartHQ™ account with Google's voice assistant for hands-free control—simply speak to a compatible device* to open your oven door. Multitasking in the kitchen has never been so effortless.
*Device must be compatible with the Google Home app.

Cook With Confidence
Using the large 5" touchscreen interface, you can cook with a favorite method, hero ingredient, cooking function, or recipe. Your oven will guide you through the steps, or change the temperature and heat type automatically, depending on your selection.

Generous Capacity
With a generous 3 cu ft total capacity, you can create several perfectly cooked dishes at once using multiple shelves. Non-tip, full-extension shelves help to ensure safe removal of hot dishes.

Exceptional Performance
Our unique cooking technologies were developed to help deliver perfect results. ActiveVent ensures optimized moisture levels, while AeroTech™ circulates heat evenly for a consistent temperature.

Self-Cleaning
Pyrolytic self-clean breaks down food residue at a very high temperature, leaving a light ash that’s easily removed with a damp cloth. The enamel-coated side racks don't need to be removed when using this function.

Design Freedom
Crafted with premium materials and detailing, this oven supports a cohesive and considered kitchen design. Complement it with our Minimal style Warming Drawer to achieve the ultimate kitchen solution.

SPECIFICATIONS

Accessories (included)

Grill rack	1 set
Pyrolytic proof shelf runners	•

Roasting dish	1
Smokeless grill tray	1
Step down wire shelf	1
Telescopic sliding runners	1 set
Wired temperature sensor	1

Capacity

Shelf positions	6
Total capacity	3 cu ft
Usable capacity	2.5 cu ft

Cleaning

Acid resistant graphite enamel	•
Easy to clean interior	•
Pyrolytic self-clean	•
Removable oven door	•
Removable side ladders	•
Self-cleaning proof side ladders	•

Controls

Adjustable audio and display settings	•
Audio feedback	•
Automatic cooking/minute timer	•
Automatic pre-set temperatures	•
Celsius/Fahrenheit temperature	•
Delay start	•
Electronic capacitive touch controls	•
Electronic clock	•
Electronic oven control	•
Guided cooking by food type and recipes	•
Handle-free design	•
Internal Light	•
Intuitive touchscreen display	•
Multi-language display	true
Smart appliance	•
Soft close doors	•
Temperature sensor	•
Touch control glass interface	•
True convection oven	•
Voice control	•
Wireless temperature sensor compatible	•

Functions

Aero Broil	•
Aero™ Bake	•
Air fry	•
Bake	•
Classic bake	•
Dehydrate	•
Maxi Broil	•
Pastry Bake	•
Pizza bake	•
Pyrolytic self-clean (Function)	•
Rapid proof	•
Roast	•
Slow cook	•
True Aero	•
Vent bake	•
Warm	•

Performance

AeroTech™ technology	•
Automatic rapid pre-heat	•
Temperature range	95 - 540

Power requirements

Amperage	20 A
Supply voltage	208 - 240 V

Product dimensions

Depth	22 1/4 "
Height	23 9/16 "
Width	23 7/16 "

SKU	82519

The product dimensions and specifications in this page apply to the specific product and model. Under our policy of continuous improvement, these dimensions and specifications may change at any time. You should therefore check with Fisher & Paykel's Customer Care Centre to ensure this page correctly describes the model currently available. © Fisher & Paykel Appliances Ltd 2020

Other product downloads available at fisherpaykel.com

- DXF
- DWG
- Energy Label (English, Canadian French)
- Installation Guide (English)
- Installation Guide (Canadian French)
- Installation Guide (Spanish)
- Planning Guide - 24" Handleless Ovens and Companions (English)
- Planning Guide - Handleless Ovens and Companions, 24" (Canadian French)
- Planning Guide - Handleless Ovens and Companions, 24" (Spanish)

- California Warning Proposition 65 (English, Spanish, Canadian French, Chinese)
- Revit
- Rhino
- Right To Repair Declaration (English, Canadian French)
- SketchUp
- User Guide (English)
- User Guide (Canadian French)
- User Guide (Spanish)

Where applicable:

All appliances use energy, and energy usage typically generates carbon emissions. **Fisher & Paykel Appliances' In-use Energy Carbon Emissions Estimate** indicates carbon emissions from a product's in-use energy. This is calculated either annually or per cycle, using the product's market-specific energy label energy consumption data multiplied by the carbon emissions factor for energy in your country or region.

Our In-use Energy Carbon Emissions Estimate is designed to assist customers in making informed purchasing decisions when comparing different Fisher & Paykel products. For example, a heat pump dryer typically has a lower In-use Energy Carbon Emissions Estimate than a vented dryer.



A PEACE OF MIND SALE
24 Hours 7 Days a Week Customer Support

T 1.888.936.7872 **W**www.fisherpaykel.com