60cm Series 9 Minimal Built-in Coffee Maker

Series 9 | Minimal

Grey Glass



Indulge in barista-style coffee at home. From Latte to Macchiato, you can enjoy perfectly crafted coffee just the way you prefer.

- With 13 options from Americano to Macchiato, for barista-standard coffee at home
- Your favourite coffee can be memorised to start your desired time, for automatic brewing
- With self-cleaning function for an effortless clean
- Part of our suite of companion products, designed to match for flexible configurations

DIMENSIONS

Height	458 mm
Width	596 mm
Depth	484 mm

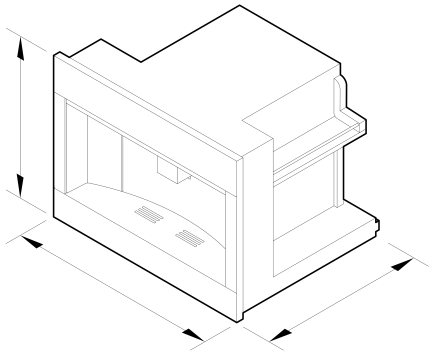

FEATURES & BENEFITS

Coffee Choice

Our coffee maker has 13 different options to suit individual taste and selection – from Flat White to Latte to Macchiato.

Self-Cleaning

The coffee maker has a self-cleaning function, and comes with a removable drip tray and a waste container for used coffee grounds.

Complementary Design

Designed to match our Minimal style Companion suite, this Coffee Maker has a premium grey glass finish.

Coffee Your Way

With a programmable timer your favourite coffee can be memorised and set to start at the same time each day. The intuitive touch display includes refill, cleaning and maintenance data, while twin LED lights illuminate your beverages creating a welcoming glow on those dark mornings.

Sized To Suit

Perfect for the compact kitchen, this Built-in Coffee Maker can be placed virtually anywhere. All our companion products can be installed at a convenient height to suit your kitchen design and preference.

Barista-Style Coffee

The conical burr grinder delivers a consistent grind for the perfect coffee. Set it to suit your preference.

SPECIFICATIONS

Accessories (included)

Coffee spoon	•
Descaling agent bottle	•
Extractable steam outlet	•
Thermal milk jug (Auto Cappuccino)	0.5 L
Water filter	•

Capacity

Coffee bean container capacity	350 g
Drip tray capacity	0.8 L
Grounds container capacity	14 cups of coffee
Number of cups	1 or 2
Water tank capacity	2.4 L

Cleaning

Easy to remove coffee grinds container	•

Easy to remove stainless steel hot water/ steam pipe	•
Removable drip tray with level indicator	•
Self-clean function	•

Controls

Cleaning reminder	•
Coffee grounds full reminder	•
High resolution touch display	•
Intuitive information display	•
LED lights	4
Multi-language interface	true
Refill coffee bean reminder	•
Water tank empty indicator	•

Features

Coffee strength levels	5
Cup size levels	4 + manual
Personalised coffee	•
Takes pre ground coffee	•

Functions

Americano	•
Cappuccino	•
Coffee	•
Double espresso	•
Espresso	•
Espresso macchiato	•
Flat white	•
Hot milk	•
Hot water	•
Latte	•
Latte macchiato	•
Long black	•
Number of functions	13
Steam	•

Performance

Coffee temperatures	5 x setting
Grinder	Stainless steel conical burr
Grinding coarseness	13 positions
Heating system	Thermablock with stainless steel tube & steamer
Heating system power (coffee / steam)	1200 W
Integrated cup warmer shelf	•
Integrated storage for accessories	•
Pump power	50 W
Pump pressure	15 bar

Power requirements

Amperage	10 A
Supply frequency	50 Hz
Supply voltage	220-240 V

Product dimensions

Depth	484 mm
Height	458 mm
Width	596 mm

SKU	82468

The product dimensions and specifications in this page apply to the specific product and model. Under our policy of continuous improvement, these dimensions and specifications may change at any time. You should therefore check with Fisher & Paykel's Customer Care Centre to ensure this page correctly describes the model currently available. © Fisher & Paykel Appliances Ltd 2020

Other product downloads available at fisherpaykel.com

- DXF
- DWG
- Installation Guide (English)
- Planning Guide - 60cm Minimal Ovens and Companions (English)
- Planning Guide - Handleless Ovens and Companions (English)
- Revit
- Revit
- Rhino
- SketchUp
- User Guide (English)

Where applicable:

All appliances use energy, and energy usage typically generates carbon emissions. **Fisher & Paykel Appliances' In-use Energy Carbon Emissions Estimate** indicates carbon emissions from a product's in-use energy. This is calculated either annually or per cycle, using the product's market-specific energy label energy consumption data multiplied by the carbon emissions factor for energy in your country or region.

Our In-use Energy Carbon Emissions Estimate is designed to assist customers in making informed purchasing decisions when comparing different Fisher & Paykel products. For example, a heat pump dryer typically has a lower In-use Energy Carbon Emissions Estimate than a vented dryer.



A PEACE OF MIND SALE
24 Hours 7 Days a Week Customer Support

T 08000 886 605 Wwww.fisherpaykel.com