60cm Series 7 Contemporary Pyrolytic Oven, 9 Function

Series 7 | Contemporary

Stainless Steel



With generous capacity and beautiful contemporary styling, this built-in oven will complement your kitchen design perfectly.

- 85L total capacity, with 9 oven functions including Pizza Bake and Roast
- Moisture level control with ActiveVent™ technology
- Pyrolytic self-cleaning function breaks down food residue for an easy clean
- Non-tip, full-extension shelves for safe removal of hot dishes

DIMENSIONS

Height	598 mm
Width	596 mm
Depth	565 mm

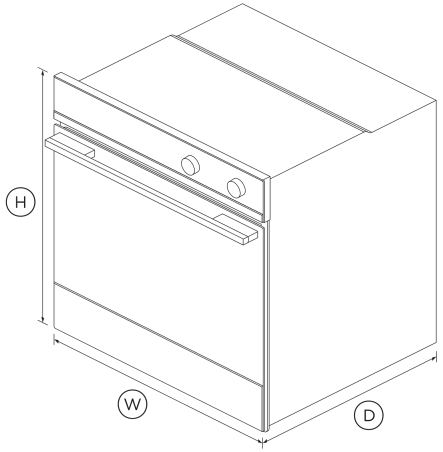

FEATURES & BENEFITS

Multi-Function Flexibility

Nine functions including Roast, Pizza Bake and Fan Grill mean no matter what you're cooking, you've got the right heat to match.

Generous Capacity

With a generous sized internal cavity of 85L total capacity, you can create several dishes at once using multiple shelves.

Activevent™ Technology

With ActiveVent™ technology for optimised moisture levels and AeroTech™ for even heat distribution, you'll get perfect results even when using multiple shelves.

Cleaning Is Simple

Pyrolytic self-clean breaks down food residue at a very high temperature, leaving a light ash that's easily removed with a damp cloth.

BEAUTY OF CHOICE

With the choice of stylish stainless steel or elegant black, you can choose the finish that complements your kitchen design best.

Safe And Sound

The CoolTouch door features triple glazing and a cooling system that ensures it's safe to touch from the outside – protecting both your hands and the surrounding cabinetry.

SPECIFICATIONS

Accessories (included)

Chromed shelf runners	•
Full extension sliding shelves	1 set
Grill rack	1 set
Roasting dish	1
Smokeless grill tray	1
Step down wire shelf	1

Accessories (sold separately)

Handle kit Contemporary round, aluminium	Part 81645
Optional round handle	Part 81645

Capacity

Shelf positions	6
Total capacity	85 L
Usable capacity	72 L

Cleaning

Acid resistant graphite enamel	•
Pyrolytic self-clean	•
Removable oven door	•
Removable oven door inner glass	•
Removable side ladders	•

Controls

Audio feedback	•
Automatic cooking/minute timer	•
Automatic pre-set temperatures	•
Celsius/Fahrenheit temperature	•
Electronic clock	•
Electronic oven control	•
Soft close doors	•

Functions

Bake	•
Fan bake	•
Fan forced	•
Fan grill	•
Grill	•
Number of functions	9
Pastry Bake	•
Pyrolytic self-clean (Function)	•
Roast	•
Slow cook	•

Performance

ActiveVent™ system	•
AeroTech™ technology	•
Automatic rapid pre-heat	•
Grill power	3000 W
Whisper quiet cooking	•

Power requirements

Amperage	15 A
Supply frequency	50 Hz
Supply voltage	220 - 240 V

Product dimensions

Depth	565 mm
Height	598 mm
Width	596 mm

Safety

Balanced oven door	•
Catalytic venting system	•
Control panel key lock	•
CoolTouch door	•
Non-tip shelves	•

SKU	81880

The product dimensions and specifications in this page apply to the specific product and model. Under our policy of continuous improvement, these dimensions and specifications may change at any time. You should therefore check with Fisher & Paykel's Customer Care Centre to ensure this page correctly describes the model currently available. © Fisher & Paykel Appliances Ltd 2020

Other product downloads available at fisherpaykel.com

- DXF
- Data Sheet (English)
- DWG
- Installation Guide (Chinese)
- Revit
- Rhino
- Restriction of the Use of Hazardous Substances (Chinese)
- Restriction of the Use of Hazardous Substances (Chinese)
- Restriction of the Use of Hazardous Substances (Chinese)
- SketchUp
- User Guide (Chinese)

Where applicable:

All appliances use energy, and energy usage typically generates carbon emissions. **Fisher & Paykel Appliances' In-use Energy Carbon Emissions Estimate** indicates carbon emissions from a product's in-use energy. This is calculated either annually or per cycle, using the product's market-specific energy label energy consumption data multiplied by the carbon emissions factor for energy in your country or region.

Our In-use Energy Carbon Emissions Estimate is designed to assist customers in making informed purchasing decisions when comparing different Fisher & Paykel products. For example, a heat pump dryer typically has a lower In-use Energy Carbon Emissions Estimate than a vented dryer.