24" Series 11 Minimal Handleless Self-Cleaning Oven

Series 11 | Minimal

Grey Glass



This refined handleless oven with pyrolytic self-cleaning features a large 6.8” touchscreen and method-led cooking for perfect results.

- Create perfect results with precise cooking methods, including Air Fry and Slow Cook, via the large 6.8” touchscreen
- Full-extension sliding shelves make it easy to take hot dishes out of the oven
- Moisture control and even heat distribution thanks to ActiveVent™ and AeroTech™ technology
- SmartHQ™ app offers the ability to preheat remotely or check cooking progress

DIMENSIONS

Height	23 9/16 "
Width	23 7/16 "
Depth	22 1/4 "

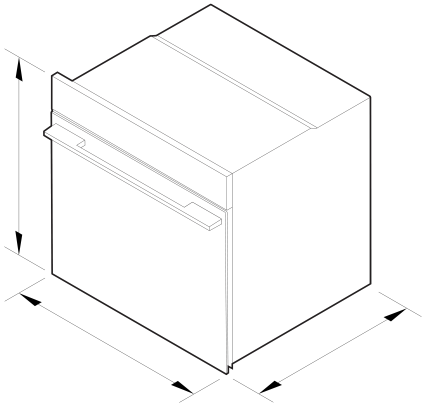

FEATURES & BENEFITS

Exceptional Performance

Experience unmatched performance and effortless convenience with precise cooking methods and pyrolytic self-cleaning. Guided by a deep understanding of the science of cooking, we've mastered the balance of heat, humidity and airflow to deliver precise cooking methods, from Air Fry to Slow Cook, that bring out the full potential of every ingredient. With ActiveVent™ technology to manage humidity levels, you can expect consistently perfect results on every shelf.

Engineered for Life

Built for enduring performance, our Ovens undergo intensive testing equivalent to 7,300 hours or 20 years of real-world use, delivering durability you can rely on.

Mastery of Temperature

Whether you want to Proof Bread, Roast Chicken or Bake Pastry, each of our precise cooking methods has been carefully calibrated with the optimal combination of heat, temperature, and humidity to help preserve texture, retain nutrients, and enhance flavour. With additional guidance for multi-shelf cooking and the Temperature Sensor, it brings true mastery of temperature to every dish.

Considered Design

Every detail of our Minimal style appliances has been meticulously designed. With a grey glass finish, handleless design, and intuitive 6.8" touchscreen, every element aligns beautifully. Create your ultimate kitchen solution with our range of ovens and companion products, creating a seamless and cohesive look when installed side by side or stacked, with perimeter gaps as small as 1/16". The perfect pairing of style and precision for your kitchen.

Generous Capacity

An expansive 3 cu ft capacity provides plenty of room for all your dishes, whether it's everyday meals, family feasts, or entertaining a crowd. The full-extension, non-tip shelves glide effortlessly, making it simple and safe to remove hot dishes.

Effortless Cleaning

Pyrolytic self-cleaning uses very high temperatures to break down food residue into fine ash, so there's no need for scrubbing or harsh chemicals. Once the cycle is complete, any remaining ash can be easily wiped away, helping keep your oven clean with minimal effort and less time spent on maintenance.

Multi-functional Accessories

Thoughtfully designed accessories expand your cooking possibilities. Designed to fit seamlessly into the side ladders, each accessory sits securely in place for confident cooking. The Multi-Functional Air Fry Tray promotes even airflow for crisp, golden results, while the Roasting Dish works seamlessly with your oven. The Wired Temperature Sensor helps achieve precise cooking results by monitoring food temperature in real time.

Connect and Control

Connected cooking brings intelligence and ease to your kitchen. With Wi-Fi and the SmartHQ™ app, you can monitor and control your oven remotely, receive real time notifications, and access helpful guidance. Software updates are delivered through the app to keep your appliance current with the latest features and functionality. Voice control with Google Assistant offers hands free convenience, while our temperature sensors support precise, confident cooking.

SPECIFICATIONS

Accessories (included)

Full extension sliding shelves	2
Handleless door key	1
Multi-functional Air fry tray	1
Roasting dish	1
Wired temperature sensor	1

Capacity

Shelf positions	6
Total capacity	3 cu ft
Usable capacity	2.5 cu ft

Cleaning

Acid resistant graphite enamel	•
Pyrolytic self-clean	•
Removable oven door	•
Removable side ladders	•

Connected Features

Alerts and notifications	•
Education and onboarding	•
Monitoring	•
Remote operation	•
Software updates	•

Consumption

Energy usage	270kWh/year
In-use energy carbon emissions estimate	34.2kgCO2e/year

Controls

Adjustable audio and display settings	•
Audio feedback	•
Automatic cooking/minute timer	•
Automatic pre-set temperatures	•
Celsius/Fahrenheit temperature	•
Delay start	•
Electronic oven control	•
Guided touchscreen cooking	•
Handle-free design	•
Interface type	6.8" touchscreen
Internal Light	•
Intuitive touchscreen display	•
Multi-language display	true
Sabbath mode with Star K certification	•
Smart appliance	•
Soft close doors	•
Voice control	•
Wireless temperature sensor compatible	•

Functions

Aero Broil	•
Aero™ Bake	•
Air fry	•
Bake	•
Classic bake	•
Classic fan	•
Dehydrate	•
Eco slow cook	•
Maxi Broil	•
Number of functions	13
Roast	•
Slow cook	•
True Aero	•
Vent bake	•

Performance

ActiveVent™ system	•
AeroTech™ technology	•
Automatic rapid pre-heat	•
Grill power	3000 W
Method Cooking	•
Temperature range	95F - 540F

Power requirements

Connection type	Hard-wired
Dedicated circuit	20 A
Rated power	3200 / 4200 W
Supply frequency	60 Hz
Supply voltage	208 / 240 V

Product dimensions

Depth	22 1/4 "
Height	23 9/16 "

Width	23 7/16 "

Safety

Control panel key lock	•

SKU	85831

The product dimensions and specifications in this page apply to the specific product and model. Under our policy of continuous improvement, these dimensions and specifications may change at any time. You should therefore check with Fisher & Paykel's Customer Care Centre to ensure this page correctly describes the model currently available. © Fisher & Paykel Appliances Ltd 2020

Other product downloads available at fisherpaykel.com

- DWG
- DXF
- Care & Maintenance (English)
- Care & Maintenance (Canadian French)
- Care & Maintenance (Spanish)
- Energy Label (English and Canadian French)
- First Use (English)
- First Use (Canadian French)
- First Use (Spanish)
- Installation Considerations (English, Canadian French, Spanish)
- Installation Guide (English)
- Installation Guide (Spanish)
- Installation Guide (Canadian French)
- Planning Guide - 24" Series 9 & 11 Minimal Handleless (English)
- Planning Guide - 24" Series 9 & 11 Minimal Handleless (Canadian French)
- Planning Guide - 24" Series 9 & 11 Minimal Handleless (Spanish)
- California Warning Proposition 65 (English, Spanish, Canadian French, Chinese)
- Revit
- Rhino
- Safety & Warnings (English, Canadian French, Spanish)
- Sketchup

Where applicable:

All appliances use energy, and energy usage typically generates carbon emissions. **Fisher & Paykel Appliances' In-use Energy Carbon Emissions Estimate** indicates carbon emissions from a product's in-use energy. This is calculated either annually or per cycle, using the product's market-specific energy label energy consumption data multiplied by the carbon emissions factor for energy in your country or region.

Our In-use Energy Carbon Emissions Estimate is designed to assist customers in making informed purchasing decisions when comparing different Fisher & Paykel products. For example, a heat pump dryer typically has a lower In-use Energy Carbon Emissions Estimate than a vented dryer.



A PEACE OF MIND SALE
24 Hours 7 Days a Week Customer Support
T 1.888.936.7872 Wwww.fisherpaykel.com