# Gas Range, 30", 4 Burners

Series 7 | Professional

Stainless Steel | LPG

Professional style and performance, with high power burners delivering high heat or the most gentle simmer.

- Top burner heat of 22,500 BTU, for seriously fast boiling
- Gas oven with 4.6 cu ft total capacity
- Non-tip full-extension shelves for safe removal of hot dishes

## DIMENSIONS

| | |
|---|---|
| **Height** | **35 3/4 - 36 3/4"** |
| **Width** | **29 7/8"** |
| **Depth** | **29 1/8"** |

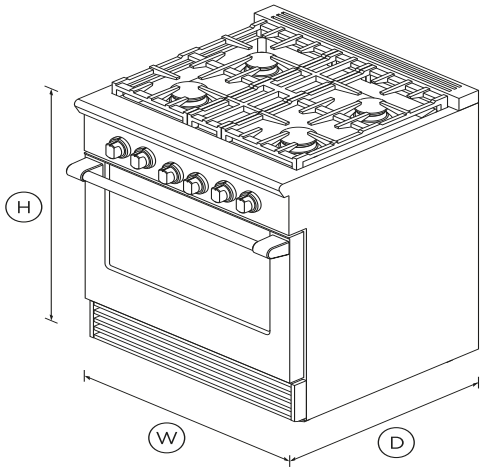


## FEATURES & BENEFITS

**Cooktop power**
Sealed Dual Flow Burners™ deliver cooktop power up to 22,500 BTU (NG models) for seriously fast boiling right down to a precise 140°F full surface simmer with the gentlest of flames.

**Total control**
Precise control across high and low settings is delivered through the halo-illuminated cooktop dials. The ovens have true convection and electronic oven control for precise and consistent temperatures.

**Easy to clean**
A sealed cooktop surface coupled with a commercial-style stainless steel finish means your cooktop simply needs a quick wipe to keep it looking good as new.

**Instant visibility**
Control dials have halo-illumination glowing white – heating up; orange – temperature reached; red – self-cleaning mode. The oven is illuminated by two powerful incandescent lights.

**Cooking flexibility**
The cooktop is designed for easy access to any burner, with grates you can smoothly slide pots across, while the oven cavity is large enough to allow you to cook multiple dishes at once

**<<Missing Feature Title>>**
This range has been carefully crafted in every detail from performance to durability using quality materials.

## SPECIFICATIONS

**Accessories**

| | |
|---|---|
| Square handle option | **AH-R30** |

**Capacity**

| | |
|---|---|
| Shelf positions | **5** |

**Cleaning**

| | |
|---|---|
| Dishwasher proof trivets | • |

**Controls**

| | |
|---|---|
| Electric circuit | **3 wire** |
| Metal illuminated dials | • |

**Gas Requirements**

| | |
|---|---|
| Fitting and pipe | **½ NPT, min. ⅝″ ⍰ flex line** |
| Supply Pressure (natural gas) | **6″ to 9″ W.C** |

### Oven features

| | |
|---|---|
| Broil pan | • |
| Electronic oven control | • |
| Full extension telescopic | • |
| Infrared Broiler | • |
| Internal light | • |

### Oven functions

| | |
|---|---|
| Bake | • |
| Broil | • |
| Convection bake | • |
| Number of functions | **3** |

### Oven performance

| | |
|---|---|
| Bake power | **28,000 BTU** |

### Power requirements

| | |
|---|---|
| Amperage | **15A** |
| Rated current | **15A** |
| Supply frequency | **60Hz** |

### Product dimensions

| | |
|---|---|
| Depth | **29 1/8″** |
| Depth (excluding handles) | **2918mm** |
| Height | **35 3/4 - 36 3/4″** |
| Width | **29 7/8″** |

### Rangetop features

| | |
|---|---|
| Sealed Dual Flow Burners™ | **4** |
| Sealed range top | • |
| Vent trim included | • |

### Rangetop Performance

| | |
|---|---|
| Power back centre | **18,500 BTU** |
| Power back right | **18,500 BTU** |
| Power front left | **22,500 BTU** |
| Power front right | **18,500 BTU** |

### Recommended Back Guards Ventilation

| | |
|---|---|
| Combustible situation | **BGRV2-3030H** |
| Minimum CFM | **600** |
| Non combustible situation | **BGRV2-3030 / BGRV2-1230** |
| Recommended hood | **HCB30-6_N (Professional** |

### Safety

| | |
|---|---|
| Full extension telescopic | • |

| | |
|---|---|
| SKU | 71356 |

TEST The product dimensions and specifications in this page apply to the specific product and model. Under our policy of continuous improvement, these dimensions and specifications may change at any time. You should therefore check with Fisher & Paykel's Customer Care Centre to ensure this page correctly describes the model currently available. ? Fisher & Paykel Appliances Ltd 2020

**A PEACE OF MIND SALE**

**24 Hours 7 Days a Week Customer Support**

**T** 1.888.936.7872 **W**www.fisherpaykel.com