Front Loader Washing Machine, 8kg

Series 5 | Front Load

White



This front loader cares for all kinds of fabrics, with a cycle for everything from delicates to bulky items.

- 13 wash cycles including Allergy, Handwash and SuperQuick
- Add a Garment function allows you to add items mid cycle
- 4.5-star water and 4-star energy rating

DIMENSIONS

Height	850 mm
Width	600 mm
Depth	645 mm

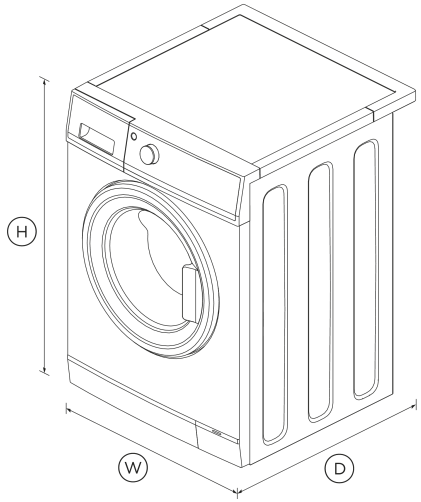

FEATURES & BENEFITS

Quiet performer

SmartDrive™ uses a direct drive motor, removing the need for belts, pulleys and the traditional block designed to hold down the machine. Without these heavy components, it vibrates less for a quieter wash.

ADD A GARMENT

Missed an item from your wash? Our Add a Garment function allows you to pause your wash cycle, open the door and add or remove items, then carry on washing.

Quick wash cycles

Vortex Wash speeds up the cleaning process so most cycles take less than an hour to complete. During the tumble action, water is forced from the bottom of the drum up through your clothes so detergent and heat reach your fabric faster.

Easy to use

This machine has a cycle to suit every load type including delicates, sportswear and woollens. Select a cycle with the easy to use SmartTouch™ control dial.

Energy efficient

Our front loaders can be installed with both hot and cold water inlets allowing for better energy efficiency and quicker wash cycles. Cold water can be heated within the washing machine or hot water can be drawn directly from your plumbing.

Timed dispenser

A liquid dispenser ensures detergent is distributed at exactly the right time in the cycle to optimise wash performance.

SPECIFICATIONS

Capacity

Capacity	8 kg

Consumption

Energy rating	Grade 1
Estimated Yearly Energy Usage (kWh)	0.67kWh/cycle
Water consumption per cycle	55L

Features

Add a garment (immediate door opening)	•
Auto out of balance correction	•
Automatic water level	•
Delay start	•
Door and gasket flushing	•
Excess foam detection	•
Flood protection	•
Interior light	•
Keylock	•

Progress indicator	•
SmartTouch™ control dial	•
Stainless steel drum	•
Time to go	•
Water supply	Hot & Cold
Wrinkle Free	•

Performance

Maximum spin speed	1400 rpm
Noise (spin)	58 dBA
Noise (wash)	49 dBA
Smart Diagnosis of problems	•
Vortex wash	•

Product dimensions

Depth	645 mm
Height	850 mm
Width	600 mm

Wash Cycles

Allergy	•
Bulky	•
Cottons	•
Delicate	•
Drum Clean	•
Eco-Active™	•
Everyday	•
Handwash	•
Heavy	•
Number of wash cycles	13
Quick	•
Quick 30	•
Spin	•
Super Quick	•

SKU	98112

The product dimensions and specifications in this page apply to the specific product and model. Under our policy of continuous improvement, these dimensions and specifications may change at any time. You should therefore check with Fisher & Paykel's Customer Care Centre to ensure this page correctly describes the model currently available. © Fisher & Paykel Appliances Ltd 2020

Other product downloads available at fisherpaykel.com

- Installation Guide - Cavity Sizes (English)
- User Guide (English)

Where applicable:

All appliances use energy, and energy usage typically generates carbon emissions. **Fisher & Paykel Appliances' In-use Energy Carbon Emissions Estimate** indicates carbon emissions from a product's in-use energy. This is calculated either annually or per cycle, using the product's market-specific energy label energy consumption data multiplied by the carbon emissions factor for energy in your country or region.

Our In-use Energy Carbon Emissions Estimate is designed to assist customers in making informed purchasing decisions when comparing different Fisher & Paykel products. For example, a heat pump dryer typically has a lower In-use Energy Carbon Emissions Estimate than a vented dryer.