612L Series 7 French Door Refrigerator Freezer, Precision Fit, Non-Plumbed Ice & Water

Series 7 | Contemporary

Black Stainless Steel | French hinge



This French Door Refrigerator Freezer offers chilled water and automatic ice without the need for plumbing. Precision Fit reduces visual gaps for closer cabinetry alignment, while ActiveSmart™ Foodcare and Humidity Control Bins help keep food fresher for longer. It brings refined design, intelligent technology, and flexible food care together in one considered appliance.

- Precision Fit allows for reduced gaps around the refrigerator and closer alignment with cabinetry
- Chilled water and automatic ice making without the need for plumbing
- ActiveSmart™ and Humidity Control Bins help keep food fresher for longer
- Connect with Wi-Fi and the SmartHQ™ app to receive notifications and guides

DIMENSIONS

Height	1790 mm
Width	905 mm
Depth	690 mm

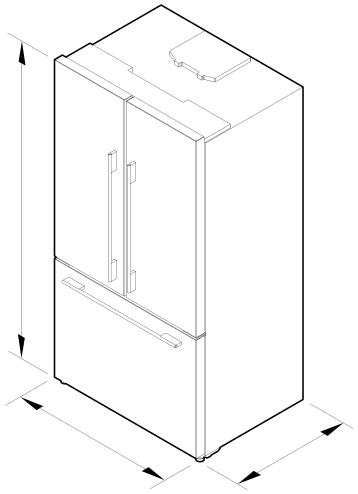

FEATURES & BENEFITS

A NEW STANDARD IN DESIGN FREEDOM

A well-composed kitchen is defined by clean lines and careful alignment. Our latest innovation in Freestanding Refrigeration, Precision Fit, reduces the visual gaps around the refrigerator and enables a closer alignment with cabinetry while maintaining unrestricted door opening. Engineered for precise and lasting alignment, it delivers a new level of design freedom with all the benefits of freestanding refrigeration.

CONNECTED CARE FOR LASTING PERFORMANCE

Ongoing care is key to maintaining performance over time. With Wi-Fi and the SmartHQ™ app, you can access software updates and guides plus adjust and monitor temperatures.

ICE AND WATER ANYWHERE

Enjoy chilled water and automatic ice without the need for plumbing. A refillable 3L water tank supplies both the external water dispenser and the internal ice maker in the freezer, producing nearly 1kg of ice each day, with the flexibility to position your refrigerator wherever it suits your space.

EXTEND FRESHNESS WITH HUMIDITY CONTROL

Optimal humidity is fundamental to the preservation of fruits and vegetables. Our Humidity Control Bins with grooved lids are tested by our team of food scientists to maintain ideal humidity levels. Proven to store fruit and vegetables fresher for up to 6 times longer* than on the main shelf, preserving the flavour, nutrients and texture of your produce. *Based on internal testing, according to IEC 63169:2020/A1:2025

INTELLIGENT COOLING

Designed to learn the rhythm of your kitchen, ActiveSmart™ Foodcare continuously monitors door openings, temperature fluctuations and the surrounding climate — adjusting cooling and airflow to maintain the precise storage conditions, while optimising energy efficiency by cooling only when necessary.

GENEROUS CAPACITY, FLEXIBLE STORAGE

The right layout makes all the difference. An extra-large capacity with a 70:30 split of fresh to frozen storage gives more space to the fresh foods you reach for every day. Combined with full-width adjustable shelving and wide door openings, it offers flexible storage that adapts to your needs.

CONSIDERED DESIGN

Designed to make ingredients easier to access and organise, the freezer features a magnetic latch that brings the top drawer forward when the freezer door is opened, giving easier access to frequently used items. In the refrigerator compartment, full-extension runners improve visibility and help protect produce from damage during storage, while removable bins simplify cleaning and maintenance.

ENGINEERED FOR LIFE

Refrigerators need to endure years of daily use. Designed for reliable performance, our models are life-tested beyond standard safety requirements, with each door shelf impact-tested over 70,000 times to ensure lasting durability.

SPECIFICATIONS

Capacity

Volume	612 L
Volume freezer	187 L
Volume refrigerator	425 L

Connected Features

Alerts and notifications	•
Consumable subscription	•
Education and onboarding	•
Monitoring	•
Remote operation	•
Software updates	•

Consumption

Energy rating	5 star
Energy usage	358kWh/year

Features

Adjustable door shelves	4
Adjustable glass cantilevered shelves	•
Cantilevered glass shelves	2
Door alarm	•
Fruit and vegetable bins	3
LED bin lighting	•
LED ceiling lighting	•
Precision fit	•
Smart appliance	•

Freezer Features

Automatic ice maker	•
Bottle chill	•
Door alarm	•
Freezer bins	3
Ice bin and scoop	•
Ice Boost	•
LED bin lighting	•
Max Cold	•

Installation Dimensions

Minimum inside width of cabinetry frame	925 mm
Minimum internal depth of cabinetry	700 mm
Minimum internal height of cabinetry	1800 mm

Performance

ActiveSmart™ Foodcare	•
Adaptive defrost	•
Frost free	•
Humidity control system	•
Inverter controlled compressor	•
Sabbath mode	•

Power requirements

Rated current	1.6 A
Supply voltage	230 V

Product dimensions

Depth	690 mm
Height	1790 mm
Minimum air clearance - each side	10 mm
Minimum air clearance - on top	10 mm
Width	905 mm

Variable Temp Compartment

Bottle chill mode	•

SKU 27069

The product dimensions and specifications in this page apply to the specific product and model. Under our policy of continuous improvement, these dimensions and specifications may change at any time. You should therefore check with Fisher & Paykel's Customer Care Centre to ensure this page correctly describes the model currently available. © Fisher & Paykel Appliances Ltd 2020

Other product downloads available at fisherpaykel.com

- DWG
- DXF
- Care & Maintenance (English)

Energy Label (English)

- First Use Guide (English)
- Installation Considerations (English UK)
- Water Filter Replacement Instructions - Parts 847200 and 847201 (English)
- Installation Guide (English)
- Planning Guide (English)
- Revit
- Rhino
- Safety & Warnings (English)
- SketchUp

Where applicable:

All appliances use energy, and energy usage typically generates carbon emissions. **Fisher & Paykel Appliances' In-use Energy Carbon Emissions Estimate** indicates carbon emissions from a product's in-use energy. This is calculated either annually or per cycle, using the product's market-specific energy label energy consumption data multiplied by the carbon emissions factor for energy in your country or region.

Our In-use Energy Carbon Emissions Estimate is designed to assist customers in making informed purchasing decisions when comparing different Fisher & Paykel products. For example, a heat pump dryer typically has a lower In-use Energy Carbon Emissions Estimate than a vented dryer.



A PEACE OF MIND SALE
24 Hours 7 Days a Week Customer Support

T 0800 372 273 **W**www.fisherpaykel.com