60cm Series 9 Contemporary Built-In Combination Microwave Oven

Series 9 | Contemporary

Stainless Steel



The speed of microwave cooking with the versatility of convection oven technology in a companion model, for perfect pairing.

- 37L total capacity
- 10 different auto cooking modes including Defrost , plus convection cooking or Grill
- Part of our suite of companion products, designed to match aesthetically for flexible configurations.

DIMENSIONS

Height	458 mm
Width	596 mm
Depth	562 mm

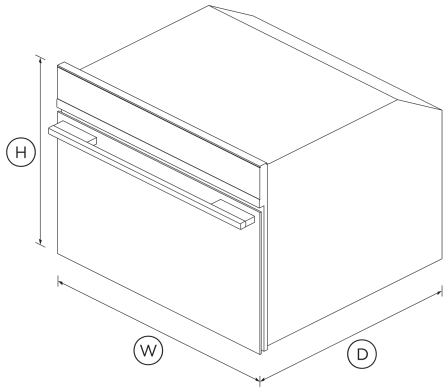

FEATURES & BENEFITS

Sized To Suit

A compact 60cm width means this Microwave Oven can be placed almost anywhere – all companion products can be installed at a convenient height to suit your kitchen design and preference.

Cooking Flexibility

Choice of nine cooking modes including Fan Forced and Grill, giving you the best of microwave and convection oven technology.

Easy To Use

An easy-to-use, intuitive display gives you all the information you need, including a cooking guide with nine pre-selected food cooking recipes.

Complementary Design

Finished in black reflective glass with a polished metal trim, this Microwave Oven is designed to match the other companion products and the rest of Fisher & Paykel's kitchen family.

Safe & Sound

The CoolTouch door is safe to touch from the outside, protecting your hands and the surrounding cabinetry.

Easy Cleaning

This Microwave Oven has formed side racks and a stainless steel interior that are easy to clean.

SPECIFICATIONS

Accessories (included)

Baking pan	1
Glass turntable	1
Wire shelf	1

Accessories (sold separately)

Handle kit Contemporary round, aluminium	Optional round handle
Optional 76cm/30" trim kit	Part 81883
Optional round handle	Part 81671

Capacity

Shelf positions	3
Total capacity	37 L
Usable capacity	33 L

Cleaning

Easy clean stainless steel interior	•
Easy to clean formed side racks	•

Consumption

Microwave energy consumption	1.65 kWh

Controls

Audio feedback	•
Automatic cooking/minute timer	•
Celsius/Fahrenheit temperature	•
Electronic capacitive touch controls	•
Electronic oven control	•
Intuitive touchscreen display	•

Functions

Defrost by time	•
Defrost by weight	•
Fan forced	•
Fan grill	•
Grill	•
Microwave + grill	•
Microwave + ring	•
Microwave cooking	•
Number of functions	9
Ring + grill	•

Performance

Grill power	1500 W
Microwave power	900 W
Microwave power levels	6

Power requirements

Amperage	15 A
Supply frequency	60 Hz
Supply voltage	220 V

Product dimensions

Depth	562 mm
Height	458 mm
Width	596 mm

Safety

Control panel key lock	•
CoolTouch door	•

SKU	81932

The product dimensions and specifications in this page apply to the specific product and model. Under our policy of continuous improvement, these dimensions and specifications may change at any time. You should therefore check with Fisher & Paykel's Customer Care Centre to ensure this page correctly describes the model currently available. © Fisher & Paykel Appliances Ltd 2020

Other product downloads available at fisherpaykel.com

- DXF
- Archicad
- Archicad - 760mm Trim

Data Sheet (English)

- DWG
- Installation Guide (English)
- Installation Guide (Chinese)
- Revit
- Revit - 600mm Trim
- Revit - 760mm Trim
- Rhino
- Rhino - 600mm Trim
- Rhino - 760mm Trim
- Restriction of the Use of Hazardous Substances (Chinese)
- Restriction of the Use of Hazardous Substances (Chinese)
- SketchUp
- SketchUp - 600mm Trim
- SketchUp - 760mm Trim
- User Guide (English)
- User Guide (Chinese)

Where applicable:

All appliances use energy, and energy usage typically generates carbon emissions. **Fisher & Paykel Appliances' In-use Energy Carbon Emissions Estimate** indicates carbon emissions from a product's in-use energy. This is calculated either annually or per cycle, using the product's market-specific energy label energy consumption data multiplied by the carbon emissions factor for energy in your country or region.

Our In-use Energy Carbon Emissions Estimate is designed to assist customers in making informed purchasing decisions when comparing different Fisher & Paykel products. For example, a heat pump dryer typically has a lower In-use Energy Carbon Emissions Estimate than a vented dryer.