60cm Series 5 Contemporary Oven, 6 Function

Series 5 | Contemporary

Stainless Steel



With generous capacity and beautiful Contemporary styling, this built-in oven will complement your kitchen design perfectly.

- Generous 85L total capacity
- Six oven functions including Pizza Bake
- With AeroTech™ technology for even heating
- Designed to match the Contemporary style family of appliances

DIMENSIONS

Height	598 mm
Width	597 mm
Depth	565 mm

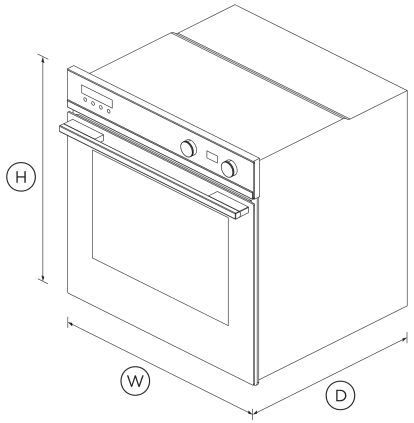

FEATURES & BENEFITS

Multi-Function Flexibility

Each function has been perfected to ensure that no matter what you're cooking, you've got the right heat to match. This built-in oven has six functions including Bake, Fan Bake and Pizza Bake, allowing you to use a variety of cooking styles.

Generous Capacity

With a generous 85L total capacity, you can create several perfectly cooked dishes at once using multiple shelves.

Even Heating

Ideal for multi-shelf cooking, this built-in oven features AeroTech™ – a technology that circulates heat evenly.

Easy To Clean

Cleaning this oven is quick and easy thanks to the optional catalytic liners which absorb oil and fat splashes during cooking.

Design Freedom

Designed to fit seamlessly into your kitchen, this built-in oven features premium materials and detailing to support a cohesive, considered kitchen design.

Safe And Sound

The CoolTouch door features triple glazing and a cooling system that ensures it's safe to touch from the outside – protecting both your hands and the surrounding cabinetry.

SPECIFICATIONS

Accessories (included)

Chromed shelf runners	•
Flat brushed baking tray	1
Roasting dish	1
Step down wire shelf	1
Telescopic sliding runners	1 set
Wire shelf	1

Capacity

Shelf positions	6
Total capacity	85 L
Usable capacity	72 L

Cleaning

Acid resistant graphite enamel	•
Removable oven door	•
Removable oven door inner glass	•
Removable side ladders	•

Controls

Halogen lights	•

Functions

Bake	•
Fan bake	•
Fan forced	•
Fan grill	•
Grill	•
Pizza bake	•

Performance

AeroTech™ technology	•
Grill power	2500 W
Temperature range	50°C - 250°C

Power requirements

Amperage	15 A

Product dimensions

Depth	565 mm
Height	598 mm
Width	597 mm

SKU	82774

The product dimensions and specifications in this page apply to the specific product and model. Under our policy of continuous improvement, these dimensions and specifications may change at any time. You should therefore check with Fisher & Paykel's Customer Care Centre to ensure this page correctly describes the model currently available. © Fisher & Paykel Appliances Ltd 2020

Other product downloads available at fisherpaykel.com

- DXF
- Archicad
- DWG
- Installation Guide (English)
- Revit
- Rhino
- SketchUp
- User Guide (English)

Where applicable:

All appliances use energy, and energy usage typically generates carbon emissions. **Fisher & Paykel Appliances' In-use Energy Carbon Emissions Estimate** indicates carbon emissions from a product's in-use energy. This is calculated either annually or per cycle, using the product's market-specific energy label energy consumption data multiplied by the carbon emissions factor for energy in your country or region.

Our In-use Energy Carbon Emissions Estimate is designed to assist customers in making informed purchasing decisions when comparing different Fisher & Paykel products. For example, a heat pump dryer typically has a lower In-use Energy Carbon Emissions Estimate than a vented dryer.

24/7

A PEACE OF MIND SALE
24 Hours 7 Days a Week Customer Support
T 0800 372 273 Wwww.fisherpaykel.com