24" Series 9 Minimal Handleless Compact Combi-Steam Oven

Series 9 | Minimal

Black Glass



With its sleek handleless design and slim profile, our compact Combination Steam Oven is designed to be the cornerstone of any kitchen, ensuring versatile placement.

- Handleless oven design ensures smooth, uninterrupted lines in your kitchen cabinetry for a cohesive look
- 23 oven functions including Steam, Sous Vide, Air Fry and Crisp Regenerate
- Guided touchscreen cooking makes it simple to cook by food, function or recipe
- Designed to pair with companion products such as vacuum seal drawers

DIMENSIONS

Height	18 "
Width	23 7/16 "
Depth	22 1/4 "

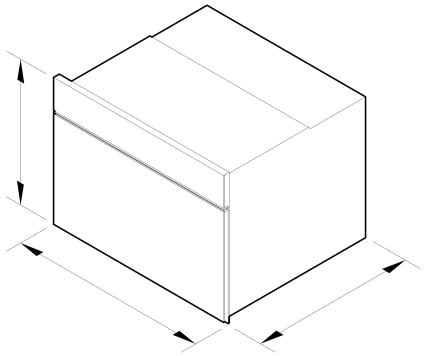

FEATURES & BENEFITS

Handleless Design

Effortlessly open and close your oven with a gentle press of a button, ensuring convenience and smooth operation in the kitchen. Moving away from traditional oven doors, this model is an ideal match for kitchens with a continuous, handle-free design, ensuring a seamless flow across the cabinetry.

Hands-Free Control

Experience the ultimate kitchen convenience with the SmartHQ™ app's voice-activated oven door. Connect your SmartHQ™ account with Google's voice assistant for hands-free control—simply speak to a compatible device* to open your oven door. Multitasking in the kitchen has never been so effortless.
*Device must be compatible with the Google Home app.

Cook With Confidence

Using the large 5" touchscreen interface, you can cook with a favourite method, hero ingredient, cooking function or recipe. Your oven will guide you through the steps, or change the temperature and heat type automatically, depending on your selection.

Sized To Suit

The compact height of this combi steam oven allows for versatile placement. You have the flexibility to install at a convenient height to suit your kitchen design and preference.

Preserve Flavor And Nutrients

Perfect for delicate dishes like snapper or salmon, steam cooking preserves nutrients and texture, offering a healthier way to enjoy meals. With specialized steam functions, including Sous Vide, the combi steam oven brings out the best in every ingredient, ensuring your creations are both nutritious and delicious.

Reheat And Restore

Give your leftovers a new life with our Steam Regenerate function, ensuring meals like roast chicken and risotto retain freshness and flavor. For that just-baked quality in pastries, bread, and pizza, use Crisp Regenerate for the perfect reheat that keeps every bite deliciously crispy.

Steam Clean

Keep your oven spotless with the natural power of steam. The oven's steam cleaning feature simplifies maintenance by helping lift stubborn spills, allowing for a quick wipe-down.

SPECIFICATIONS

Accessories (included)

Broil pan	1

Broil rack	1
Chromed shelf runners	•
Descale solution	2
Full extension sliding shelves	1
Large steam dish	1
Perforated large steam dish	1
Perforated small pan	1
Wire shelf	1
Wired temperature sensor	1

Capacity

Shelf positions	4
Total capacity	1.9 cu ft
Usable capacity	1.6 cu ft
Water tank capacity	47.3

Cleaning

Acid resistant graphite enamel	•
Descale cycle	•
Drying cycle	•
Easy to clean interior	•
Removable oven door	•
Removable side ladders	•
Removable water tank	•
Steam clean (oven)	•

Controls

Adjustable audio and display settings	•
Audio feedback	•
Automatic cooking/minute timer	•
Automatic pre-set temperatures	•
Celsius/Fahrenheit temperature	•
Delay start	•
Electronic capacitive touch controls	•
Electronic clock	•
Electronic oven control	•
Guided cooking by food type and recipes	•
Handle-free design	•
Internal Light	•
Intuitive touchscreen display	•
Multi-language display	true
Smart appliance	•
Soft close doors	•
Temperature sensor	•
Touch control glass interface	•
True convection oven	•
Voice control	•
Wireless temperature sensor compatible	•

Functions

Aero Broil	•
Aero™ Bake	•
Air fry	•
Bake	•
Classic bake	•
Crisp regenerate	•
Maxi Broil	•
Pastry Bake	•
Pizza bake	•
Roast	•
Slow cook	•
Sous vide	•
Steam	•
Steam clean (oven)	•
Steam defrost	•
Steam proof	•
Steam regenerate	•
True Aero	•
True Aero + High steam	•
True Aero + Low steam	•
True Aero + Medium steam	•
Vent bake	•
Warm	•

Performance

Temperature range	95 - 445

Power requirements

Amperage	20 A
Supply frequency	60 Hz
Supply voltage	208 - 240 V

Product dimensions

Depth	22 1/4 "
Height	18 "
Width	23 7/16 "

SKU	82607

The product dimensions and specifications in this page apply to the specific product and model. Under our policy of continuous improvement, these dimensions and specifications may change at any time. You should therefore check with Fisher & Paykel's Customer Care Centre to ensure this page correctly describes the model currently available. © Fisher & Paykel Appliances Ltd 2020

Other product downloads available at fisherpaykel.com

- DXF
- DWG
- Energy Label (English, Canadian French)
- Installation Guide (English)
- Installation Guide (Canadian French)
- Installation Guide (Spanish)
- Planning Guide - 24" Handleless Ovens and Companions (English)
- Planning Guide - Handleless Ovens and Companions, 24" (Canadian French)
- Planning Guide - Handleless Ovens and Companions, 24" (Spanish)
- California Warning Proposition 65 (English, Spanish, Canadian French, Chinese)
- Revit
- Rhino
- Right To Repair Declaration (English, Canadian French)
- SketchUp
- User Guide (English)
- User Guide (Canadian French)
- User Guide (Spanish)

Where applicable:

All appliances use energy, and energy usage typically generates carbon emissions. **Fisher & Paykel Appliances' In-use Energy Carbon Emissions Estimate** indicates carbon emissions from a product's in-use energy. This is calculated either annually or per cycle, using the product's market-specific energy label energy consumption data multiplied by the carbon emissions factor for energy in your country or region.

Our In-use Energy Carbon Emissions Estimate is designed to assist customers in making informed purchasing decisions when comparing different Fisher & Paykel products. For example, a heat pump dryer typically has a lower In-use Energy Carbon Emissions Estimate than a vented dryer.

24/7

A PEACE OF MIND SALE
24 Hours 7 Days a Week Customer Support
T 1.888.936.7872 Wwww.fisherpaykel.com