Freestanding Dishwasher, Sanitise

Series 7 | Contemporary

With flexible racking you can adjust to suit your load, and multiple wash features for beautifully clean dishes.

DIMENSIONS

Height	**820 - 870**
Width	**597**
Depth	**600**

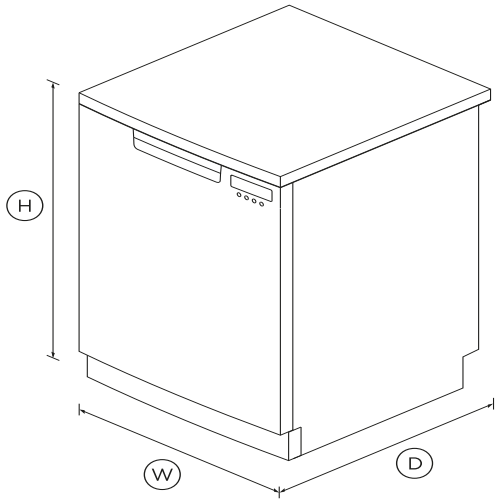

SPECIFICATIONS

Accessories

Kickstrip	**proud-white**

Capacity and loading

Accommodates round plates	**300mm**
Adjustable height, foldable	•
Easy lift adjustable upper	•
Fold down tines	•
Full width cutlery/utensil tray	•
Height adjustable rear wine	•
Pitch adjustable tines	•
Place settings	**15**
Wine glass supports	•

Controls

Child lock	•
End of cycle beeps	•
Energy saving delay start	•
Rinse aid indicator light	•
Time remaining LED display	•

Features

Half load option	•
Quiet operation	•
ThermoDry system	•
Three-stage filtration system	•
Variable wash pressure	•

Performance

Noise emissions	**43dBA**

Power requirements

Amperage	**10A**

Product dimensions

Depth	**600**
Height	**820 - 870**

Width	**597**

Warranty

Parts and labour	**2 years**

Wash Program Modifiers

Extra Dry	•
Half-load	•
Quick	•
Wash modifiers	**4**

Wash Programs

Auto	•
Delicate	•
Eco	•
Fast	**30 minutes**
Heavy	•
Medium	**109 minutes**
Rinse	•
Wash programs	**7**

Water connection

Water pressure	**0.03 - 1Mpa**

SKU	81631

The product dimensions and specifications in this page apply to the specific product and model. Under our policy of continuous improvement, these dimensions and specifications may change at any time. You should therefore check with Fisher & Paykel's Customer Care Centre to ensure this page correctly describes the model currently available. ? Fisher & Paykel Appliances Ltd 2020

A PEACE OF MIND SALE

24 Hours 7 Days a Week Customer Support

T 0800 372 273 **W**www.fisherpaykel.com