60cm Series 9 Minimal Compact Combi-Microwave Oven

Series 9 | Minimal

Grey Glass



The speed of microwave cooking with the versatility of convection oven technology in a compact companion model, for perfect pairing.

- Generous 49L capacity, with four shelf positions
- A Wired Temperature Sensor precisely monitors cooking in real time
- Guided touchscreen cooking makes it simple to navigate cooking processes
- Wi-Fi enabled and works with the SmartHQ™ app for remote control and notifications

DIMENSIONS

Height	458 mm
Width	596 mm
Depth	565 mm

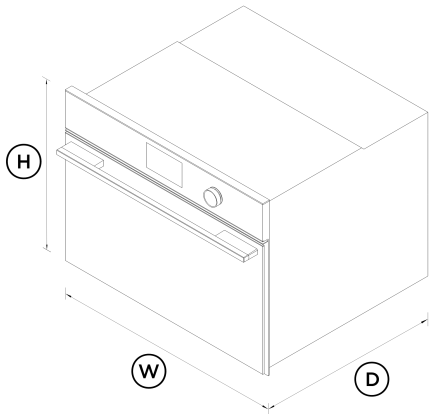

FEATURES & BENEFITS

Cooking Flexibility

Choose from 22 functions, including four microwave-only functions, 14 traditional oven functions, and four combination functions, giving you the best microwave and convection oven technology.

Cook With Confidence

The 5” screen provides an intuitive guided cooking experience that helps to deliver perfect results, whether you’ve been cooking all your life or are just starting out.

Sized To Suit

A compact 60cm width means this microwave oven can be placed almost anywhere – all companion products can be installed at a convenient height to suit your kitchen design and preference.

Complementary Design

With a subtle grey glass finish, this Minimal style oven blends seamlessly, enhancing your kitchen design without dominating it. It’s understated and elegant, whether on its own or part of a matching appliance set.

Multi-Function Flexibility

Each function has been tailored and tested to ensure perfect defrosting, heating and cooking. A Wired Temperature Sensor precisely monitors cooking in real time, giving you complete control.

Safe And Sound

The CoolTouch door is safe to touch from the outside, protecting your hands and the surrounding cabinetry.

SPECIFICATIONS

Accessories (included)

Chromed shelf runners	•
Glass tray	1
Grill rack	1 set
Step down wire shelf	1
Wire shelf	1
Wired temperature sensor	1

Capacity

Shelf positions	4
Total capacity	49 L
Usable capacity	38 L

Cleaning

Acid resistant graphite enamel	•
Removable oven door	•
Removable oven door inner glass	•
Removable side ladders	•

Consumption

Energy rating	A+

Controls

Adjustable audio and display settings	•
Audio feedback	•
Automatic cooking/minute timer	•
Automatic pre-set temperatures	•
Celsius/Fahrenheit temperature	•
Delay start	•
Electronic clock	•
Electronic oven control	•
Guided cooking by food type and recipes	•
Internal Light	•
Intuitive touchscreen display	•
Multi-language display	UK English
Sabbath mode with Federation of Synagogues certification	•
Smart appliance	•
Soft close doors	•
Temperature sensor	•
True convection oven	•
Turned stainless steel dials with illuminated halos	•

Functions

Air fry	•
Bake	•
Defrost	•
Dehydrate	•
Fan bake	•
Fan forced	•
Fan forced + Micro (3 levels)	•
Fan grill	•
Fan grill + Micro (3 levels)	•
Grill	•
Grill + Micro (3 levels)	•
Microwave cooking	•
Number of functions	22
Pastry Bake	•
Pizza bake	•
Popcorn	•
Quick start	•
Rapid proof	•
Roast	•
Roast + Micro (3 levels)	•
Slow cook	•
Vent bake	•
Warm	•

Performance

ActiveVent™ system	•
AeroTech™ technology	•
Automatic rapid pre-heat	•
Grill power	3000 W
Microwave by levels	•
Microwave power	900 W
Microwave power levels	6
Temperature range	35 - 230°C
Whisper Quiet Cooking	•

Power requirements

Amperage	16 A
Supply frequency	50 Hz
Supply voltage	220-240 V

Product dimensions

Depth	565 mm
Height	458 mm
Width	596 mm

Safety

Balanced oven door	•
Control panel key lock	•
CoolTouch door	•
Non-tip shelves	•
Safety thermostat	•

SKU	82653

The product dimensions and specifications in this page apply to the specific product and model. Under our policy of continuous improvement, these dimensions and specifications may change at any time. You should therefore check with Fisher & Paykel's Customer Care Centre to ensure this page correctly describes the model currently available. © Fisher & Paykel Appliances Ltd 2020

Other product downloads available at fisherpaykel.com

- DXF
- Archicad
- Declaration of Conformity (English)

- DWG
- Planning Guide - 60cm Minimal Ovens and Companions (English)
- Revit
- Rhino
- SketchUp
- User Guide (English)

Where applicable:

All appliances use energy, and energy usage typically generates carbon emissions. **Fisher & Paykel Appliances' In-use Energy Carbon Emissions Estimate** indicates carbon emissions from a product's in-use energy. This is calculated either annually or per cycle, using the product's market-specific energy label energy consumption data multiplied by the carbon emissions factor for energy in your country or region.

Our In-use Energy Carbon Emissions Estimate is designed to assist customers in making informed purchasing decisions when comparing different Fisher & Paykel products. For example, a heat pump dryer typically has a lower In-use Energy Carbon Emissions Estimate than a vented dryer.



A PEACE OF MIND SALE
24 Hours 7 Days a Week Customer Support

T 08000 886 605 **W**www.fisherpaykel.com