76cm Series 11 Minimal Handleless Pyrolytic Steam Assist Oven

Minimal



This handleless oven with Steam Assist and pyrolytic self-cleaning features a large 6.8” touchscreen and method-led cooking for perfect results.

- Create perfect results with precise cooking methods, including Reverse Sear and Regenerate, via the large 6.8” touchscreen
- Steam Assist combines convection heat with steam for even heat distribution, enhanced texture and optimised browning
- Generous capacity with full-extension sliding shelves and twin vertical fans, for perfect results across multiple shelves
- SmartHQ™ app offers the ability to preheat remotely or check cooking progress

DIMENSIONS

Height	729 mm
Width	758 mm
Depth	595 mm

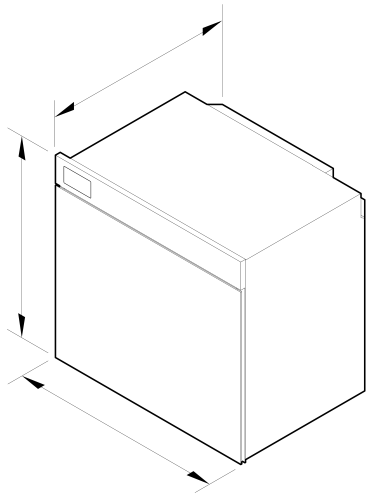

FEATURES & BENEFITS

EXCEPTIONAL PERFORMANCE

Steam Assist and pyrolytic cleaning deliver exceptional performance with effortless convenience. Guided by a deep understanding of the science of cooking, we’ve mastered the balance of heat, humidity and airflow to deliver precise cooking methods, from Reverse Sear to Regenerate, that bring out the full potential of every ingredient. With Twin Vertical Fans and ActiveVent™ technology, you can expect consistently perfect results on every shelf.

ENHANCE FLAVOUR, RETAIN NUTRIENTS

Carefully balanced for every dish, Steam Assist ensures a consistent, precisely controlled delivery of steam throughout the cook — with three levels of steam automatically calibrated to your selection. For Bread, it keeps the dough surface moist, allowing an even, airy crumb and a perfectly thin, crispy crust. For Proteins, it accelerates heat transfer, retaining moisture and texture for tender, succulent results.

CONSIDERED DESIGN

Every detail of our Minimal style appliances has been meticulously designed. With a black glass finish, handleless design, and intuitive 6.8” touchscreen, every element aligns beautifully. Create your ultimate kitchen solution with our range of ovens and companion products, creating a seamless and cohesive look when installed side by side or stacked — with perimeter gaps as small as 2mm. The perfect pairing of style and precision for your kitchen.

MASTERY OF TEMPERATURE

Whether you want to Reverse Sear an Eye Fillet, Proof Sourdough, or Dehydrate Citrus, each of our precise cooking methods has been carefully calibrated with the optimal combination of heat, temperature, and humidity to help preserve texture, retain nutrients, and enhance flavour. With additional guidance for multi-shelf cooking and Temperature Sensors, it brings true mastery of temperature to every dish.

EFFORTLESS CLEANING

For effortless wipe-downs, pyrolytic cleaning uses very high temperatures to turn residues into fine ash, while the removable crumb tray sits discreetly under the door hinge to catch drips or crumbs and is easily removed for cleaning. The redesigned door showcases remarkable engineering — a gentle push lifts the glass out smoothly, making deep cleaning simple and satisfying.

MULTI-FUNCTIONAL ACCESSORIES

Thoughtfully designed accessories expand your cooking possibilities. The Multi-Functional Air Fry Tray adapts seamlessly for Air Frying, Baking, or Grilling, its perforated design ensuring even airflow. Multi-use by design, it reduces storage needs and helps to support a sustainable kitchen, while the Wired Temperature Sensor delivers real-time monitoring and useful alerts.

CONNECT AND CONTROL

Connected cooking brings intelligence and ease to your kitchen. With WiFi and the SmartHQ™ app, you can monitor and control your oven remotely, receive real time notifications, and access helpful guidance. Software updates are delivered through the app to keep your appliance current with the latest features and functionality. Voice control with Google Assistant offers hands free convenience — simply speak to a connected device to open the oven door. For precise and confident cooking, our temperature sensors provide guidance to help you achieve perfect results.

SPECIFICATIONS

Accessories (included)

Descale solution	2
Full extension sliding shelves	2 sets
Handleless door key	1
Multi-functional Air fry tray	1
Roasting dish	1
Wired temperature sensor	1

Capacity

Shelf positions	8
Total capacity	137 L
Usable capacity	130 L
Water tank capacity	670ml

Cleaning

Acid resistant graphite enamel	•
Descale cycle	•
Pyrolytic self-clean	•
Pyrolytic-proof side ladders	•
Removable oven door	•
Removable side ladders	•
Removable water tank	•

Controls

Adjustable audio and display settings	•
Audio feedback	•
Automatic cooking/minute timer	•
Automatic pre-set temperatures	•
Celsius/Fahrenheit temperature	•
Certified Sabbath mode	•
Delay start	•
Guided touchscreen cooking	•
Halogen lights	•
Handle-free design	•
Interface type	6.8" touchscreen
Intuitive touchscreen display	•
Multi-language display	true
Smart appliance	•
Soft close doors	•
Temperature sensor	•
True convection oven	•
Voice control	•
Wireless temperature sensor compatible	•

Functions

Air fry	•
Bake	•
Classic bake	•
Classic fan	•
Crisp regenerate	•
Dehydrate	•
Fan bake	•
Fan forced	•
Fan forced + High steam	•
Fan forced + Low steam	•
Fan forced + Medium steam	•
Fan grill	•
Grill	•
Maxi Grill	•
Number of functions	17
Roast	•
Slow cook	•
Vent bake	•

Performance

ActiveVent™ system	•
AeroTech™ technology	•
Automatic rapid pre-heat	•
Method Cooking	•

Power requirements

Rated current	20 A
Supply frequency	50 Hz
Supply voltage	220 - 240 V

Product dimensions

Depth	595 mm
Height	729 mm
Width	758 mm

Safety

Control panel key lock	•

SKU 84883

The product dimensions and specifications in this page apply to the specific product and model. Under our policy of continuous improvement, these dimensions and specifications may change at any time. You should therefore check with Fisher & Paykel's Customer Care Centre to ensure this page correctly describes the model currently available. © Fisher & Paykel Appliances Ltd 2020

Other product downloads available at fisherpaykel.com

- DWG
- DXF
- Care & Maintenance (English)
- First Use (English)
- Installation Guide (English)
- Planning Guide - 76cm Minimal Handleless (English)
- Revit
- Rhino
- Safety & Warnings (English)
- SketchUp

Where applicable:

All appliances use energy, and energy usage typically generates carbon emissions. **Fisher & Paykel Appliances' In-use Energy Carbon Emissions Estimate** indicates carbon emissions from a product's in-use energy. This is calculated either annually or per cycle, using the product's market-specific energy label energy consumption data multiplied by the carbon emissions factor for energy in your country or region.

Our In-use Energy Carbon Emissions Estimate is designed to assist customers in making informed purchasing decisions when comparing different Fisher & Paykel products. For example, a heat pump dryer typically has a lower In-use Energy Carbon Emissions Estimate than a vented dryer.

24/7

A PEACE OF MIND SALE
24 Hours 7 Days a Week Customer Support
T 0800 372 273 Wwww.fisherpaykel.com