30" Series 11 Minimal Combi-Steam Oven

Series 11 | Minimal

Black Glass



With its refined Minimal design, this Combi-Steam oven offers steam cooking, convection cooking, or a combination of both - with method-led cooking.

- Create perfect results with precise cooking methods, including Sous Vide and Crisp Regenerate, via the large 6.8” touchscreen
- Simple maintenance with a Dry Cycle to remove moisture inside the oven after steaming
- Generous 3 cu ft total capacity with 6 shelf positions
- With WiFi and the SmartHQ™ app, you can remotely monitor cooking progress and control key functions

DIMENSIONS

Height	23 9/16 "
Width	29 7/8 "
Depth	22 1/4 "

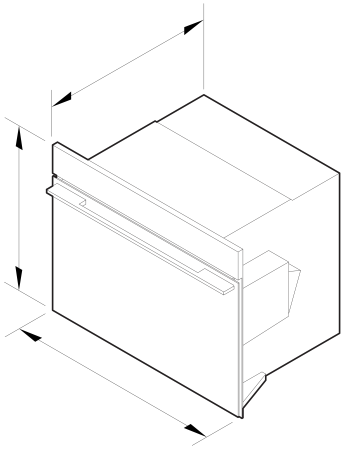

FEATURES & BENEFITS

EXCEPTIONAL PERFORMANCE

Offering Steam, Convection, or a combination of both, this oven provides exceptional versatility for every cooking style. Guided by a deep understanding of the Science of Cooking, we’ve mastered the balance of heat, humidity and airflow to deliver precise cooking methods, from Sous Vide to Crisp Regenerate, that bring out the full potential of every ingredient. The generous 3 cu ft capacity, six shelf positions, and full-extension sliding shelves make family feasts and entertaining effortless, while ActiveVent™ manages humidity for consistently perfect dishes every time.

ENHANCE FLAVOUR, RETAIN NUTRIENTS

Cooking with Steam creates a gentle, precisely controlled environment that preserves delicate textures. For a main course that delights the senses, Salmon proteins stay relaxed, keeping fillets glossy and full of natural flavour, while the cell walls of Asparagus are softened just enough to retain a crisp bite and vibrant colour. To finish, Crème Caramel is surrounded with even heat for a smooth, silky texture and uniform colour.

CONSIDERED DESIGN

Every detail of our Minimal style appliances has been meticulously designed. With a black glass finish, refined handle, and intuitive 6.8” touchscreen, every element aligns beautifully. Create your ultimate kitchen solution with our range of ovens and companion products, creating a seamless and cohesive look when installed side by side or stacked — with perimeter gaps as small as 1/16". The perfect pairing of style and precision for your kitchen.

MASTERY OF TEMPERATURE

Whether you want to Steam Rice, Air Fry Chicken, or Sous Vide Lamb, each of our precise cooking methods has been carefully calibrated with the optimal combination of heat, temperature, and humidity to help preserve texture, retain nutrients, and enhance flavour. With additional guidance for using the Temperature Sensor, it brings true mastery of temperature to every dish.

EFFORTLESS CLEANING

With Steam Clean, gentle steam lifts away stubborn spills, while the Dry Cycle efficiently removes residual moisture, leaving the oven ready for your next dish. The redesigned door showcases remarkable engineering — with smooth, full-width glass that makes deep cleaning simple and satisfying.

MULTI-FUNCTIONAL ACCESSORIES

Our purpose-built, multifunctional trays are the perfect companion to Combi-Steam Ovens. From roasting Vegetables on the solid tray to steaming Fish or Vegetables on the small and large perforated trays, each one is carefully engineered to deliver perfect results. With full-extension, non-tip shelves that glide effortlessly, it is simple and safe to remove hot dishes.

CONNECT AND CONTROL

Connected cooking brings intelligence and ease to your kitchen. With WiFi and the SmartHQ™ app, you can monitor and control your oven remotely, receive real time notifications, and access helpful guidance. Software updates are delivered through the app to keep your appliance current with the latest features and functionality. Voice control with Google Assistant offers hands free convenience, while our temperature sensors support precise, confident cooking.

SPECIFICATIONS

Accessories (included)

Broil grid	1
Broil rack	1
Chrome side ladders	2
Descale solution	2
Full extension sliding shelves	2
Large steam dish	1
Perforated large steam dish	1
Perforated small steam dish	1
Roasting dish	1
Wired temperature sensor	1

Capacity

Shelf positions	6
Total capacity	3 cu ft
Usable capacity	2.5 cu ft
Water tank capacity	47.3

Cleaning

Acid resistant graphite enamel	•
Descale cycle	•
Drying cycle	•
Removable oven door	•
Removable side ladders	•
Removable water tank	•
Steam clean (oven)	•

Connected Features

Alerts and notifications	•
Education and onboarding	•
Monitoring	•
Remote operation	•
Software updates	•

Consumption

Energy usage	245kWh/year
In-use energy carbon emissions estimate	31.0kgCO2e/year

Controls

Adjustable audio and display settings	•
Audio feedback	•
Automatic cooking/minute timer	•
Automatic pre-set temperatures	•
Celsius/Fahrenheit temperature	•
Delay start	•
Guided touchscreen cooking	•
Internal Light	•
Intuitive touchscreen display	•
Multi-language display	true
Sabbath mode with Star K certification	•
Smart appliance	•
Soft close doors	•
Temperature sensor	•
True convection oven	•
Voice control	•
Wireless temperature sensor compatible	•

Functions

Aero Broil	•
Aero™ Bake	•
Air fry	•
Bake	•
Broil	•
Classic bake	•
Classic fan	•
Crisp regenerate	•
Number of functions	18
Roast	•
Slow cook	•
Sous vide	•
Steam	•
Steam regenerate	•
True Aero	•
True Aero + High steam	•
True Aero + Low steam	•
True Aero + Medium steam	•
Vent bake	•

Performance

ActiveVent™ system	•
AeroTech™ technology	•
Automatic rapid pre-heat	•
Method Cooking	•
Temperature range	95 - 445

Power requirements

Amperage	20 A
Supply frequency	60 Hz
Supply voltage	208 / 240 V

Product dimensions

Depth	22 1/4 "
Height	23 9/16 "
Width	29 7/8 "

Safety

Control panel key lock	•

SKU	84992

The product dimensions and specifications in this page apply to the specific product and model. Under our policy of continuous improvement, these dimensions and specifications may change at any time. You should therefore check with Fisher & Paykel's Customer Care Centre to ensure this page correctly describes the model currently available. © Fisher & Paykel Appliances Ltd 2020

Other product downloads available at fisherpaykel.com

- DWG
- DXF
- Care & Maintenance (English)
- Care & Maintenance (Canadian French)
- Care & Maintenance (Spanish)
- Energy Label (English, Canadian French)
- First Use (English)
- First Use (Canadian French)
- First Use (Spanish)
- Installation Guide (English)
- Installation Guide (Canadian French)
- Installation Guide (Spanish)
- Installation Guide (English, Canadian French, Spanish)
- Planning Guide - 30" Minimal (English)
- Planning Guide - 30" Minimal (Canadian French)
- Planning Guide - 30" Minimal (Spanish)
- California Warning Proposition 65 (English, Spanish, Canadian French, Chinese)
- Revit
- Rhino
- Right To Repair Declaration (English, Canadian French)
- Safety & Warnings (English)
- Safety & Warnings (Canadian French)
- Safety & Warnings (Spanish)
- SketchUp

Where applicable:

All appliances use energy, and energy usage typically generates carbon emissions. **Fisher & Paykel Appliances' In-use Energy Carbon Emissions Estimate** indicates carbon emissions from a product's in-use energy. This is calculated either annually or per cycle, using the product's market-specific energy label energy consumption data multiplied by the carbon emissions factor for energy in your country or region.

Our In-use Energy Carbon Emissions Estimate is designed to assist customers in making informed purchasing decisions when comparing different Fisher & Paykel products. For example, a heat pump dryer typically has a lower In-use Energy Carbon Emissions Estimate than a vented dryer.

24/7

A PEACE OF MIND SALE
24 Hours 7 Days a Week Customer Support
T 1.888.936.7872 Wwww.fisherpaykel.com