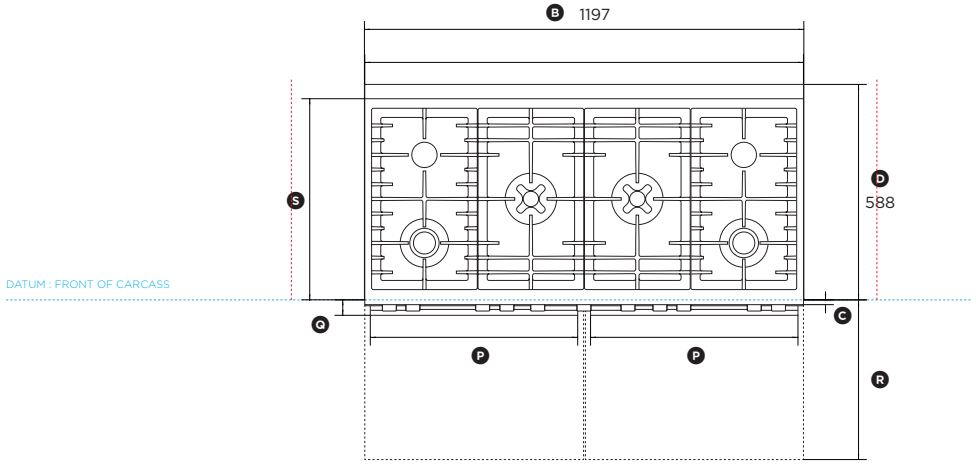

PLAN VIEW

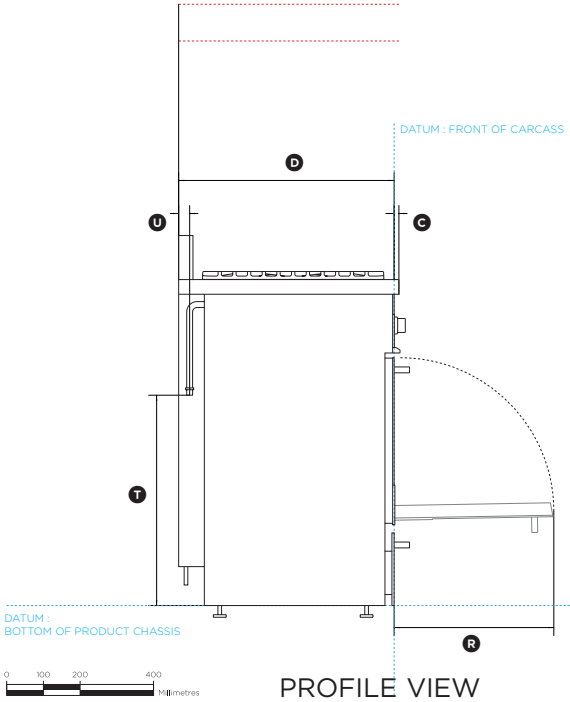

PROFILE VIEW

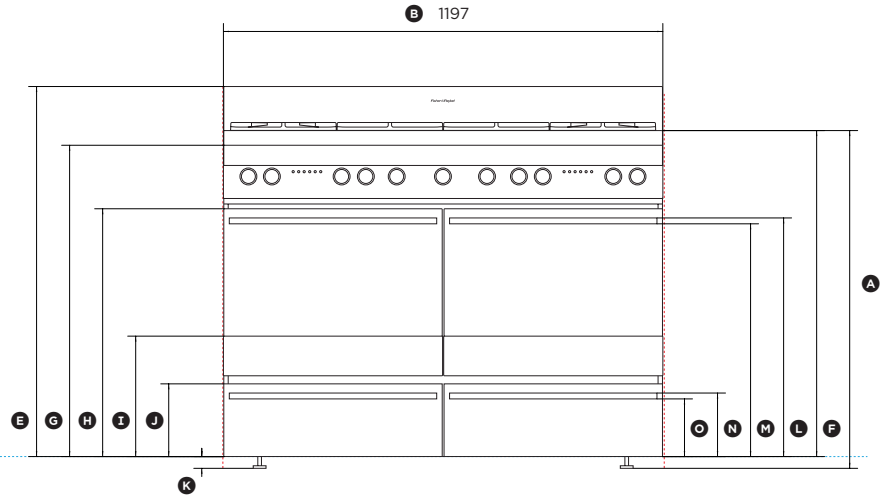

FRONT VIEW

1200mm Freestanding Cooker

Model no:

OR120DDWGFX1
OR120DDWGFX2
OR120DDWGX1

Product Dimensions	**mm**
Ⓐ Overall height of cooker*	913–925
Ⓑ Overall width of cooker (includes stainless steel cap)	1197
Ⓒ Depth of cooker from front surface to cabinetry datum (excludes handle and dials)**	12
Ⓓ Depth of cooker chassis (does not include cooker front)	588
Ⓔ Height from bottom datum to top of backguard	1008
Ⓕ Height from bottom datum to top of cooktop (excludes pan supports)	888
Ⓖ Height from bottom datum to top of fascia	848
Ⓗ Height from bottom datum to top of door	675
Ⓘ Height from bottom datum to top of door stainless cap	328
Ⓙ Height from bottom datum to top of stainless drawer panel	198
Ⓚ Height of feet (adjustable)	25–37
Ⓛ Height from bottom datum to top of door handle	650
Ⓜ Height from bottom datum to bottom of door handle	634
Ⓝ Height from bottom datum to top of drawer handle	173
Ⓞ Height from bottom datum to bottom of drawer handle	157
Ⓟ Width of handle	565
Ⓠ Depth of handle	42
Ⓡ Depth of door (open) (measured from front of door)	435
Ⓢ Depth from front datum to front of rear backguard	549
Ⓣ Distance from bottom datum to centre of gas inlet on product	573
Ⓤ Distance from rear of cooker to centre of gas inlet on product	25

* Includes adjustable mounted feet and the range of movement.
** Measured to front glass surface and excludes 2mm stainless cap

Minimum Clearances	**mm**
Minimum clearance to overhead exhaust fan	750
Minimum height clearance	650
Minimum clearance from edge of cooker to nearest combustible surface	200

DATE: **18.03.2013**

IMPORTANT NOTE: Throughout this guide, dimensions may vary by ±2mm (3/32"). Please read the installation manual for detailed information on installing the product. www.fisherpaykel.com

INDICATES PRODUCT & CABINETRY CARCASS DATUM - - - - - - - - - - -
INDICATES MINIMUM CABINETRY CLEARANCES - - - - - - - - - - - - - - - -

Fisher&Paykel