Freestanding Dishwasher

Series 5 | Contemporary

With flexible racking you can adjust to suit your load, and multiple wash features for beautifully clean dishes.

- Six wash programs to suit any load, from Delicate to Heavy
- Auto option senses the optimum wash cycle for your dishes

DIMENSIONS

Height	**820 - 870mm**
Width	**597mm**
Depth	**600mm**

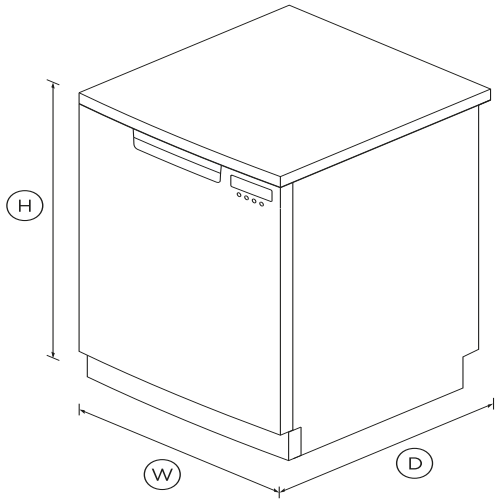

FEATURES & BENEFITS

A RELIABLE WASH

A three stage filtration system results in a superior clean. Cup racks, wine glass supports and cutlery basket allow safe and easy cleaning of everyday items. A rinse aid indicator reminds you to top up for squeaky-clean dishes.

FLEXIBLE WASH OPTIONS

This dishwasher offers six wash programs including Auto, which automatically senses the optimal wash cycle for your dishes.

QUIET PERFORMER

Running at a low decibel rate, these dishwashers do their job without making a fuss. Even the end of cycle alerts can be turned off.

EASY TO LOAD

Designed to fit 15 place settings, the middle basket, cup racks and wine glass holders are easily adjusted to accommodate different sized dishes.

SPECIFICATIONS

Accessories

Cutlery basket	•

Capacity and loading

Accommodates round plates	**300mm**
Adjustable height, foldable	•
Easy lift adjustable upper	•
Fold down tines	•
Place settings	**15**
Wine glass supports	•

Consumption

Energy rating	**3.5 star**
Energy usage	**286kWh/year**
Water consumption (per wash	**11.4L**
Water efficiency	**5 star (WELS)**

Controls

End of cycle beeps	•
Energy saving delay start	•

Keylock	•
Rinse aid indicator light	•
Time remaining LED display	•

Features

Quiet operation	•
ThermoDry system	•
Three-stage filtration system	•
Variable wash pressure	•

Performance

Noise emissions	**47dBA**

Power requirements

Amperage	**10A**
Supply frequency	**50Hz**
Supply voltage	**220 - 240V**

Product dimensions

Depth	**600mm**
Height	**820 - 870mm**
Width	**597mm**

Warranty

Parts and labour	**2 years**

Wash Programs

Auto	•
Eco	•
Fast	•
Heavy	•
Medium	•
Rinse	•
Wash programs	**6**

Water connection

Water pressure	**100kPa - 1000kPa**
Water supply	**3/4" BSP (20mm) Connector**

SKU	81635

The product dimensions and specifications in this page apply to the specific product and model. Under our policy of continuous improvement, these dimensions and specifications may change at any time. You should therefore check with Fisher & Paykel's Customer Care Centre to ensure this page correctly describes the model currently available. ? Fisher & Paykel Appliances Ltd 2020

24/7

A PEACE OF MIND SALE

24 Hours 7 Days a Week Customer Support

T 0800 372 273 **W**www.fisherpaykel.com