Series 9 Integrated Double DishDrawer Dishwasher

Series 9 | Integrated

Panel Ready

Introducing the next evolution of DishDrawer™ Dishwasher design. The Integrated Double DishDrawer™ Dishwasher delivers advanced performance, quiet efficiency and seamless integration within kitchen cabinetry. New wash technology offers a step up in energy and water efficiency, engineered for real life and shaped by decades of DishDrawer™ Dishwasher innovation.

- Wash one, stack another. Independent drawers run separately or together, fitting plates up to 11" high
- Capacitive touch controls, refined styling and SmartHQ™ connectivity bring intuitive convenience to everyday dish care.
- Adaptable racking fits everything from glassware to cookware, offering flexibility for every occasion
- Versatile wash cycles and modifiers ensure clean results, while fan-assisted drying helps leave dishes ready to use

DIMENSIONS

Height	34 - 36 3/8 "
Width	23 9/16 "
Depth	21 3/4 "

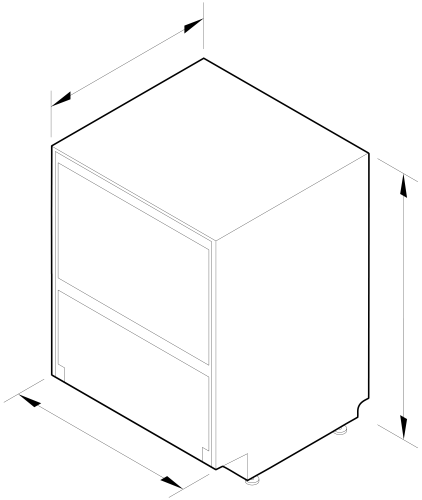

SPECIFICATIONS

Accessories (included)

Cutlery basket	•

Accessories (sold separately)

Door panel stainless steel	ADDD24DPX
Handle kit Contemporary brushed black	AHD7DDDW24B
Handle kit Contemporary brushed silver	AHD7DDDW24S
Handle kit Minimal black	AHM1DDDW24B
Handle kit Minimal grey	AHM1DDDW24G
Handle kit Professional round	AHP3-DWDD-SX
Handle kit Professional round flush, Brass off-stands	AHP3DDDW24BA
Handle kit Professional round flush, Dark Copper off-stands	AHP3DDDW24DC

Capacity and loading

Accommodates round plates up to	11" (top drawer) 11" (bottom drawer)
Adjustable height, foldable cupracks	•
Fold down tines	•
Pitch adjustable tines	•
Place settings	14
Place settings per drawer	7
Wine glass supports	•

Connected Features

Alerts and notifications	•
Education and onboarding	•
Energy consumption monitoring	•
Monitoring	•
Remote operation	•
Software updates	•

Consumption

Energy rating	Energy Star

Controls

Black touch concealed interface	•
Electronic fault/Diagnostic indicator	•
End of cycle beeps	•
Energy saving delay start option of up to 12 hours	•
Keylock	•
Knock to pause	•
Rinse aid indicator light	•
Smart appliance	•

Features

Advanced filtration	•
Built-in water softener	•
Fan assisted drying	•
Flood protection	•
Flow through detergent dispenser	•
Motor type	BLDC
Quiet operation	•
SmartDrive™ technology	•
Soft close drawer	•
Three-stage filtration system	•
Variable wash pressure technology	•

Performance

Noise emissions	43 dBA

Power requirements

Dedicated Circuit (A)	10A
Supply frequency	60 Hz
Voltage	110 - 120V

Product dimensions

Depth	21 3/4 "
Height	34 - 36 3/8 "
Width	23 9/16 "

Wash Program Modifiers

Dry +	•
Gentle	•
Intensive	•
Wash modifiers	3

Wash Programs

60 min	•
Eco	•
Heavy	•
Hygiene	•
Light	•
Medium	•
Wash programs	6

Water connection

Inlet water temperature	140 °F
Water pressure	30kPa - 1000 kPa
Water supply	3/8" to suit Male Compression Fitting

SKU	85753

The product dimensions and specifications in this page apply to the specific product and model. Under our policy of continuous improvement, these dimensions and specifications may change at any time. You should therefore check with Fisher & Paykel's Customer Care Centre to ensure this page correctly describes the model currently available. © Fisher & Paykel Appliances Ltd 2020

Other product downloads available at fisherpaykel.com

- DWG
- DXF
- First Use (English)
- First Use (Spanish)
- First Use (Canadian French)
- Planning Guide (English)
- California Warning Proposition 65 (English, Spanish, Canadian French, Chinese)
- Revit
- Rhino
- Safety & Warnings (English)
- Safety & Warnings (Spanish)
- Safety & Warnings (Canadian French)
- SketchUp

Where applicable:

All appliances use energy, and energy usage typically generates carbon emissions. **Fisher & Paykel Appliances' In-use Energy Carbon Emissions Estimate** indicates carbon emissions from a product's in-use energy. This is calculated either annually or per cycle, using the product's market-specific energy label energy consumption data multiplied by the carbon emissions factor for energy in your country or region.

Our In-use Energy Carbon Emissions Estimate is designed to assist customers in making informed purchasing decisions when comparing different Fisher & Paykel products. For example, a heat pump dryer typically has a lower In-use Energy Carbon Emissions Estimate than a vented dryer.

24/7

A PEACE OF MIND SALE
24 Hours 7 Days a Week Customer Support

T 1.888.936.7872 Wwww.fisherpaykel.com