90cm Series 7 Classic 5 Burner Dual Fuel Cooker

Series 7 | Classic

Stainless Steel



Get the best of both worlds with dual fuel. A gas cooktop with wok burner is paired with a nine-function convection oven.

- Five burner gas cooktop, with precise heat control
- Convection oven with 140L total capacity and nine oven functions including Pastry Bake and Rapid Proof
- Optional non-tip full-extension shelves for safe removal of hot dishes

DIMENSIONS

Height	898 - 946 mm
Width	897 mm
Depth	600 mm

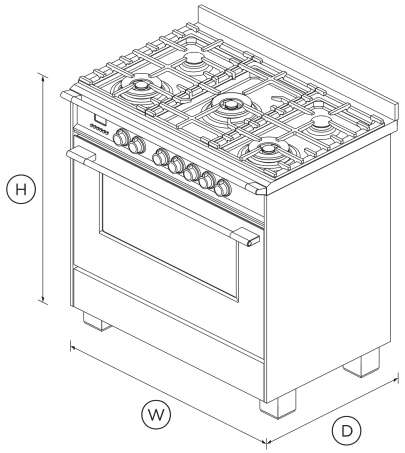

FEATURES & BENEFITS

Multi-Shelf Cooking

Our AeroTech™ system circulates air evenly throughout the entire oven so dishes on the top shelf turn out just as perfectly as food cooking on the bottom shelf.

Quality And Durability

Every detail has been carefully crafted. The solid, perfectly balanced soft-close door and durable cooktop trivets all add up to an exceptional, premium range.

Burner Power & Control

Instant and immediate control from the highest to the gentlest heat. The finely tuned cooktop controls let you sear, stir fry or simmer a delicate sauce to perfection.

Large Capacity Oven

The generous 140L total capacity oven gives you plenty of space to cook multiple dishes at once.

Easy To Clean

Your cooktop simply needs a quick wipe to keep it looking good as new for years to come, as the gas cooktop is made from a single piece of stainless steel that contains spills. The oven door, its inner pane of glass and runners can also be removed for easy cleaning.

Even Heat

Accurate, electronically-controlled oven heat ensures a great result every time.

SPECIFICATIONS

Accessories (included)

Chromed shelf runners	1 set
Flat wire shelf	1
Roasting dish	1
Small pot support	1 (part 533981 cast)
Step down wire shelf	•

Accessories (sold separately)

Full extension sliding shelves	Optional (part 578744)
Full extension telescopic shelves	Optional (part 578744)
Kick strip, stainless steel (optional)	KICKOR90X1

Burner ratings

Dual wok burner inner/outer (LPG)	14.9MJ/h
Dual wok burner inner/outer (natural gas)	16.2MJ/h
Maximum burner power	16.2MJ/h
Semi-rapid burner (natural gas)	5.8MJ/h
Semi-rapid burner (natural gas) x2	6.5MJ/h

Total cooktop power	58.0MJ/h
Triple ring wok burner (LPG) x2	14.4MJ/h
Triple ring wok burner (natural gas) x2	14.4MJ/h

Capacity

Shelf positions	6
Shelf positions (main oven)	6
Total capacity	140 L
Usable capacity	121 L
Usable capacity (main oven)	121 L

Cleaning

Acid resistant graphite enamel	•
Drop down grill element	•
Removable oven door	•
Removable oven door inner glass	•
Removable shelf runners	•

Controls

Audio feedback	•
Automatic cooking/minute timer	•
Automatic pre-set temperatures	•
Celsius/Fahrenheit temperature	•
Electronic clock	•
Laser etched graphics	•
Precise electronic temperature control	•
Sabbath mode	•
Turned stainless steel clock buttons	•

Installation Dimensions

Installation cutout dimensions (Depth)	600 mm
Installation cutout dimensions (Width)	900 mm

Oven features

AeroTech™ technology	•
Automatic rapid pre-heat	•
Bright chromed, cast zinc dials with illuminated halos	•
Electronic oven control	•
Storage compartment	•
True convection	•
Twin cavity fans	•

Oven functions

Bake	•
Classic bake	•
Fan bake	•
Fan forced	•
Fan grill	•
Grill	•
Number of functions	9
Pastry Bake with Pizza mode	•
Rapid proof	•
Roast	•
True convection	•

Oven performance

CoolTouch door	Triple glazed

Power requirements

Amperage	22 A
Supply frequency	50 Hz
Supply voltage	220 - 240 V

Product dimensions

Depth	600 mm
Height	898 - 946 mm
Width	897 mm

Rangetop features

Hob rail	•
Hob rear trim	60 mm
LPG / Natural Gas compatible	•
Sealed range top	•

Safety

Advanced cooling system	•
Anti-tilt bracket	•
Balanced oven door	•
CoolTouch door	•
Flame failure system	•
Full extension telescopic shelves	Optional (part 578744)
Non-tip shelves	•
Spill containment	26 L

SKU	81680

The product dimensions and specifications in this page apply to the specific product and model. Under our policy of continuous improvement, these dimensions and specifications may change at any time. You should therefore check with Fisher & Paykel's Customer Care Centre to ensure this page correctly describes the model currently available. © Fisher & Paykel Appliances Ltd 2020

Other product downloads available at fisherpaykel.com

- Installation Guide (English)
- Installation Guide - Kick Strip (English)
- Revit
- Rhino
- SketchUp
- User Guide (English)

Where applicable:

All appliances use energy, and energy usage typically generates carbon emissions. **Fisher & Paykel Appliances' In-use Energy Carbon Emissions Estimate** indicates carbon emissions from a product's in-use energy. This is calculated either annually or per cycle, using the product's market-specific energy label energy consumption data multiplied by the carbon emissions factor for energy in your country or region.

Our In-use Energy Carbon Emissions Estimate is designed to assist customers in making informed purchasing decisions when comparing different Fisher & Paykel products. For example, a heat pump dryer typically has a lower In-use Energy Carbon Emissions Estimate than a vented dryer.



A PEACE OF MIND SALE
24 Hours 7 Days a Week Customer Support

T 0800 372 273 Wwww.fisherpaykel.com