60cm Series 9 Minimal Warming Drawer

Series 9 | Minimal

Black Glass



Serve meals hot and directly from a pre-heated plate thanks to our panel-ready, warming drawer.

- Integrates with surrounding cabinetry for a seamless look
- Space to keep six standard-sized place settings evenly warm
- Easy to clean smooth-glass base
- Six versatile tailored programmes for warming, proofing, dehydrating and slow cooking

DIMENSIONS

Height	140 mm
Width	596 mm
Depth	567 mm

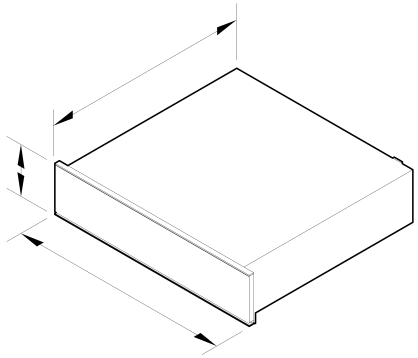

FEATURES & BENEFITS

Complementary design

Our Warming Drawer comes with the option of a stylish black glass panel or elegant grey glass panel, for seamless pairing with our Minimal or Contemporary style ovens.

Multi-function flexibility

Choose from six tailored functions including Rapid Proof for proofing dough, Dehydrate for drying foods such as meat, fruit and herbs and Slow Cook, ideal for finishing of seared meats, casseroles, stews and braises.

Precise control

With fast and even heating, our warming drawer is great for keeping food warm and low temperature cooking. You can even rest meat after a traditional roast in the oven and proof dough for bread making and pizza.

Added convenience

Handle-free, push-to-open with intuitive touch controls, our warming drawer gives you the freedom to keep plates or cups warm while you continue to cook.

Easy to clean

Cleaning and care of the warming drawer is simple. After each use, just wipe out the smooth glass interior with a damp cloth.

Safe and sound

With automatic switch-off and delayed start functionality, our warming drawers help keep dishes warm until it is time to serve the main meal.

Sized to suit

With enough room to gently heat six place settings, 20 cappuccino cups or 42 espresso cups, our 60cm warming drawer is an ideal kitchen companion.

SPECIFICATIONS

Capacity

Cappuccino cups	20
Espresso cups	42
Maximum allowable weight	25 kg
Place settings	6
Usable depth	408 mm
Usable height	98 mm
Usable width	535 mm

Cleaning

Easy clean smooth-glass base	•

Controls

Audio feedback	•
Automatic pre-set temperatures	•
Automatic timers	30', 45', 1h, 2h, 4h, 6h
Delayed start	•
Electronic capacitive touch controls	•
On/Off indicator	•
Pre-set heating functions	•
Push-to-open drawer	•
Standby mode	•

Functions

Cups	•
Dehydrate	•
Number of functions	6
Plates	•
Rapid proof	•
Slow cook	•
Warm	•

Performance

Heated glass base and fan	•
Low temperature cooking	•
Temperature levels	6
Temperature range	35°C-85°C

Power requirements

Amperage	10 A
Power cord length	1800 mm
Supply frequency	50 Hz
Supply voltage	220-240 V

Product dimensions

Adjustable front door panel to align with surrounding cabinetry	•
Depth	567 mm
Height	140 mm
Width	596 mm

Safety

Automatic turn off after 12 hours	•
Full extension slides	•

SKU	84252

The product dimensions and specifications in this page apply to the specific product and model. Under our policy of continuous improvement, these dimensions and specifications may change at any time. You should therefore check with Fisher & Paykel's Customer Care Centre to ensure this page correctly describes the model currently available. © Fisher & Paykel Appliances Ltd 2020

Other product downloads available at fisherpaykel.com

- DXF
- DWG
- Installation Guide (English)
- Installation Guide (Chinese)
- Planning Guide (English)
- Planning Guide (Chinese)
- Revit
- Rhino
- Restriction of the Use of Hazardous Substances (Chinese)
- SketchUp
- User Guide (English)
- User Guide (Chinese)

Where applicable:

All appliances use energy, and energy usage typically generates carbon emissions. **Fisher & Paykel Appliances' In-use Energy Carbon Emissions Estimate** indicates carbon emissions from a product's in-use energy. This is calculated either annually or per cycle, using the product's market-specific energy label energy consumption data multiplied by the carbon emissions factor for energy in your country or region.

Our In-use Energy Carbon Emissions Estimate is designed to assist customers in making informed purchasing decisions when comparing different Fisher & Paykel products. For example, a heat pump dryer typically has a lower In-use Energy Carbon Emissions Estimate than a vented dryer.