488L Series 7 French Door Refrigerator Freezer

Series 7 | Contemporary

Stainless Steel | French hinge



You'll have plenty of flexible storage space in this striking, large capacity French Door refrigerator freezer.

- ActiveSmart technology helps keep food fresher for longer by constantly maintaining the ideal temperature
- Spacious bottom freezer with full extension drawer gives easy access to frozen goods

DIMENSIONS

Height	1715 mm
Width	790 mm
Depth	695 mm

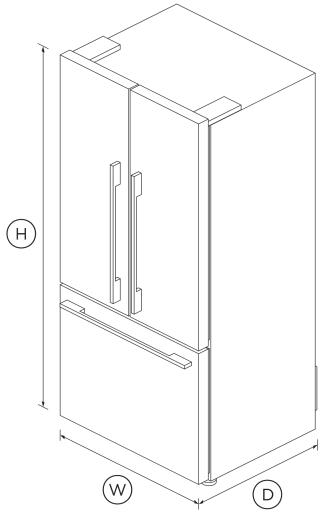

FEATURES & BENEFITS

Activesmart Foodcare

Every time you open your refrigerator, the temperature around your food changes. ActiveSmart foodcare adjusts airflow to create a stable temperature, helping your food stay fresher for longer.

Simple Storage

This refrigerator is designed to make it simple for you to store, access and remove food. Storage bins give you full access inside when they’re pulled open and can be easily removed to clean. Our flexible shelving also gives you more storage options.

Humidity control

Your fruit and veges need different environments. The humidity control slides in each storage bin create a microclimate that helps keep food fresher for longer.

Easy cleaning

No more permanent dirty marks with our EZKleen feature for stainless steel refrigerators. Anti-fingerprint coating means you simply wipe clean any marks. Spill-safe secure glass shelves easily capture any drips or leaks.

Design Quality

Our refrigerators are designed and built using quality materials. We use real stainless steel, and solid glass for shelving.

Clever Energy

Your refrigerator adapts to daily use by cooling and defrosting only when needed. This means it uses only the energy it needs without compromising on food care.

Complementary Design

With their premium handle styling and stainless steel finish, our refrigerators are designed to match the rest of Fisher & Paykel's kitchen appliance family.

SPECIFICATIONS

Capacity

Total net volume	488L
Volume freezer	142 L
Volume refrigerator	346 L

Consumption

Energy rating	Grade 3

Features

Adjustable glass shelves	2
Adjustable half width door shelves	2
Covered door shelves	2
Door alarm	•
Front levelling feet	•

Full extension runners	•
Full width door shelves	2
LED lighting	•
Rear rollers	•
Single bottle holders	4
SmartTouch control panel	•

Freezer Features

Bottle chill	•
Door alarm	•
Fast freeze	•
Freezer bins	3

Performance

ActiveSmart™ Foodcare	•
Adaptive defrost	•
Frost free freezer	•
Humidity control system	•
Inverter controlled compressor	•
R600a refrigerant	•
Sabbath mode	•

Power requirements

Connection power	240W
Rated current	10 A
Supply frequency	50 Hz
Supply voltage	220 - 240 V

Product dimensions

Depth	695 mm
Depth (including handles)	730 mm
Height	1715 mm
Minimum air clearance - each side	20 mm
Minimum air clearance - on top	50 mm
Width	790 mm

SKU 25448

The product dimensions and specifications in this page apply to the specific product and model. Under our policy of continuous improvement, these dimensions and specifications may change at any time. You should therefore check with Fisher & Paykel's Customer Care Centre to ensure this page correctly describes the model currently available. © Fisher & Paykel Appliances Ltd 2020

Other product downloads available at fisherpaykel.com

- DWG
- Installation Guide (English)
- Installation Guide (Chinese)
- Revit
- Rhino
- Restriction of the Use of Hazardous Substances (Chinese)
- SketchUp
- User Guide (English)
- Installation & User Guide (English)

Where applicable:

All appliances use energy, and energy usage typically generates carbon emissions. **Fisher & Paykel Appliances' In-use Energy Carbon Emissions Estimate** indicates carbon emissions from a product's in-use energy. This is calculated either annually or per cycle, using the product's market-specific energy label energy consumption data multiplied by the carbon emissions factor for energy in your country or region.

Our In-use Energy Carbon Emissions Estimate is designed to assist customers in making informed purchasing decisions when comparing different Fisher & Paykel products. For example, a heat pump dryer typically has a lower In-use Energy Carbon Emissions Estimate than a vented dryer.