60cm Series 7 Minimal Compact Combi Microwave Oven

Series 7 | Minimal

Grey Glass



The speed of microwave cooking with the versatility of convection oven technology in a compact companion model, for perfect pairing.

- Compact size, and generous 49L capacity with four shelf positions
- Intuitive, 2.4" display with illuminated dial
- Wi-Fi enabled and works with the SmartHQ™ app for remote control and notifications

DIMENSIONS

Height	458 mm
Width	596 mm
Depth	565 mm

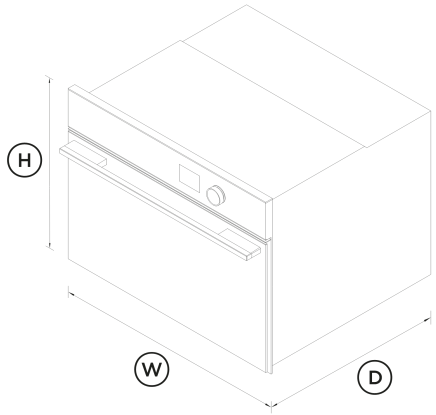

FEATURES & BENEFITS

Cooking Flexibility

Choose from 19 cooking functions including Fan Forced and Grill. With both microwave and convection oven technology in the same oven, you have more flexibility for your culinary creations.

Sized To Suit

A compact 60cm width means this microwave oven can be placed almost anywhere – all companion products can be installed at a convenient height to suit your kitchen design and preference.

Complementary Design

Finished in a subtle grey glass, our Minimal style companion products help you achieve a coherent kitchen aesthetic that suits your design style.

Easy Cleaning

This Convection Microwave Oven features easily removable side racks and an enamel interior for easy cleaning.

Safe And Sound

The CoolTouch door is safe to touch from the outside, protecting your hands and the surrounding cabinetry.

SPECIFICATIONS

Accessories (included)

Chromed shelf runners	•
Glass tray	1
Grill rack	1 set
Step down wire shelf	1
Wire shelf	1

Capacity

Shelf positions	4
Total capacity	49 L
Usable capacity	38 L

Cleaning

Acid resistant graphite enamel	•
Drying cycle	•
Easy to clean interior	•
Removable side ladders	•

Controls

Adjustable audio and display settings	•
Audio feedback	•
Automatic cooking/minute timer	•
Automatic pre-set temperatures	•
Celsius/Fahrenheit temperature	•
Certified Sabbath mode	•
Delay start	•
Dial with illuminated halo	•
Electronic capacitive touch controls	•
Electronic clock	•
Electronic oven control	•
Guided cooking	•
Internal Light	•
LED display	•
Microwave timer	•
Multi-language display	UK English
Push-to-open drawer	•
Smart appliance	•
Soft close doors	•
True convection oven	•
Turned stainless steel dials with illuminated halos	•

Functions

Air fry	•
Bake	•
Defrost	•
Fan bake	•
Fan forced	•
Fan forced + Micro (2 levels)	•
Fan forced + microwave	•
Fan grill	•
Fan grill + Micro (2 levels)	•
Grill	•
Grill + Micro (2 levels)	•
Microwave cooking	•
Pastry Bake	•
Pizza bake	•
Popcorn	•
Quick start	•
Reheat	•
Roast	•
Roast + Micro (2 levels)	•
Slow cook	•
Vent bake	•

Performance

ActiveVent™ system	•
AeroTech™ technology	•
Automatic rapid pre-heat	•
Microwave by levels	•
Microwave power	900 W
Microwave power levels	6
Temperature range	35 - 230°C
Whisper Quiet Cooking	•

Power requirements

Amperage	16 A
Supply frequency	50 Hz
Supply voltage	220-240 V

Product dimensions

Depth	565 mm
Height	458 mm
Width	596 mm

Safety

Balanced oven door	•
Control panel key lock	•
CoolTouch door	•
Non-tip shelves	•
Safety thermostat	•

SKU 82692

The product dimensions and specifications in this page apply to the specific product and model. Under our policy of continuous improvement, these dimensions and specifications may change at any time. You should therefore check with Fisher & Paykel's Customer Care Centre to ensure this page correctly describes the model currently available. © Fisher & Paykel Appliances Ltd 2020

Other product downloads available at fisherpaykel.com

- DXF
- DXF
- DWG
- Installation Guide (English)
- Planning Guide - 60cm Minimal Series 7 (English)
- Revit
- Rhino
- SketchUp
- User Guide (English)

Where applicable:

All appliances use energy, and energy usage typically generates carbon emissions. **Fisher & Paykel Appliances' In-use Energy Carbon Emissions Estimate** indicates carbon emissions from a product's in-use energy. This is calculated either annually or per cycle, using the product's market-specific energy label energy consumption data multiplied by the carbon emissions factor for energy in your country or region.

Our In-use Energy Carbon Emissions Estimate is designed to assist customers in making informed purchasing decisions when comparing different Fisher & Paykel products. For example, a heat pump dryer typically has a lower In-use Energy Carbon Emissions Estimate than a vented dryer.



A PEACE OF MIND SALE
24 Hours 7 Days a Week Customer Support

T +65 6741 0777 **W**www.fisherpaykel.com