569L Series 7 French Door Refrigerator Freezer, Ice

Series 7 | Contemporary

Stainless Steel | French hinge



Our largest capacity French Door model has intuitive, flexible storage space, with a stylish stainless steel finish.

- ActiveSmart™ technology helps keep food fresher for longer by constantly maintaining the ideal temperature.
- Spacious bottom freezer with full extension drawer gives easy access to frozen goods.
- Internal ice maker with boost feature for busy times

DIMENSIONS

Height	1790 mm
Width	900 mm
Depth	695 mm

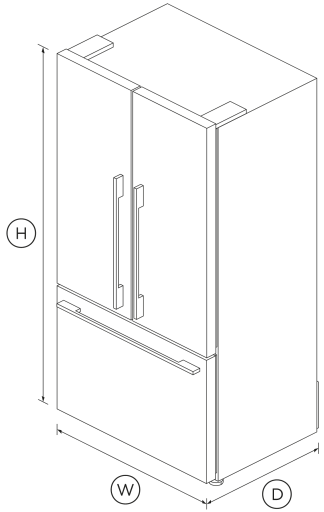

FEATURES & BENEFITS

Simple storage

This refrigerator is designed to make it simple for you to store, access and remove food. Storage bins give you full access inside when they're pulled open and can be easily removed to clean. Our flexible shelving also gives you more storage options.

Ice maker

Fresh ice is always available for you in a dedicated freezer bin. Simply turn it off to free up freezer space, or during busy times you can boost ice production by up to 30%.

Easy cleaning

No more permanent dirty marks with our EZKleen feature for stainless steel fridges. Anti-fingerprint coating means you simply wipe clean any marks. Spill-safe secure glass shelves easily capture any drips or leaks.

CLEVER ENERGY

Your refrigerator adapts to daily use by cooling and defrosting only when needed. This means it uses the energy it needs without compromising on food care.

Complementary Design

With their premium handle styling and stainless steel finish, our refrigerators are designed to match the rest of Fisher & Paykel's kitchen appliance family.

Humidity Control

Your fruit and veges need different environments. The humidity control slides in each storage bin create a microclimate that helps keep food fresher for longer.

SPECIFICATIONS

Accessories (sold separately)

Water filter replacement	847200 - FWC3

Capacity

Total net volume	569L
Volume freezer	152 L
Volume refrigerator	417 L

Connected Features

Alerts and notifications	•
Education and onboarding	•
Remote operation	•
Software updates	•

Consumption

Energy rating	E
Energy usage	297kWh/year
In-use energy carbon emissions estimate	57.6kgCO2e/year

Controls

Interior light	•

Features

Adjustable door shelves	6
Adjustable glass shelves	3
Covered door shelves	2
Deli storage bins	2
Door alarm	•
Front levelling feet	•
Fruit and vegetable bins	2
Full extension runners	•
LED lighting	•
Smart appliance	•
SmartTouch control panel	•
Spill proof removable bins	•
Stackable bottle holders	4

Freezer Features

Automatic ice maker	•
Bottle chill	•
Door alarm	•
Fast freeze	•
Ice bin and scoop	•
Ice Boost	•
LED Lighting	•

Performance

ActiveSmart™ Foodcare	•
Adaptive defrost	•
Frost free	•
Frost free freezer	•
Humidity control system	•
Inverter controlled compressor	•
Noise emissions	42 dBA
Noise emissions class	D
R600a refrigerant	•
Sabbath mode	•

Power requirements

Rated current	10 A
Supply frequency	50 Hz
Supply voltage	220 - 240 V

Product dimensions

Depth	695 mm
Depth (including handles)	730 mm
Height	1790 mm
Height to top of cabinet	1790 mm
Minimum air clearance - each side	20 mm
Minimum air clearance - on top	50 mm
Width	900 mm

Variable Temp Compartment

Bottle chill mode	•

SKU 26686

The product dimensions and specifications in this page apply to the specific product and model. Under our policy of continuous improvement, these dimensions and specifications may change at any time. You should therefore check with Fisher & Paykel's Customer Care Centre to ensure this page correctly describes the model currently available. © Fisher & Paykel Appliances Ltd 2020

Other product downloads available at fisherpaykel.com

- Declaration of Conformity (English)
- Energy Label
- Water Filter Replacement Instructions - Parts 847200 and 847201 (English)
- Installation Guide (English)
- Product Information Sheet
- Product Information Sheet
- Product Information Sheet
- User Guide (English)

Where applicable:

All appliances use energy, and energy usage typically generates carbon emissions. **Fisher & Paykel Appliances' In-use Energy Carbon Emissions Estimate** indicates carbon emissions from a product's in-use energy. This is calculated either annually or per cycle, using the product's market-specific energy label energy consumption data multiplied by the carbon emissions factor for energy in your country or region.

Our In-use Energy Carbon Emissions Estimate is designed to assist customers in making informed purchasing decisions when comparing different Fisher & Paykel products. For example, a heat pump dryer typically has a lower In-use Energy Carbon Emissions Estimate than a vented dryer.



A PEACE OF MIND SALE
24 Hours 7 Days a Week Customer Support

T 08000 886 605 Wwww.fisherpaykel.com