8.5kg + 5kg Series 7 Front Loader Washer Dryer Combi

Series 7 | Combination

White



A complete laundry solution for when you need to maximise space while washing and drying your clothes with superior fabric care.

- With 10 continuous wash and dry cycles including Delicate and Quick wash, 10 wash only cycles and 9 dry only cycles
- 8.5kg wash load and 5kg dry load
- Easy installation with no venting required
- Wash and dry an average load in under three hours

DIMENSIONS

Height	850 mm
Width	600 mm
Depth	645 mm

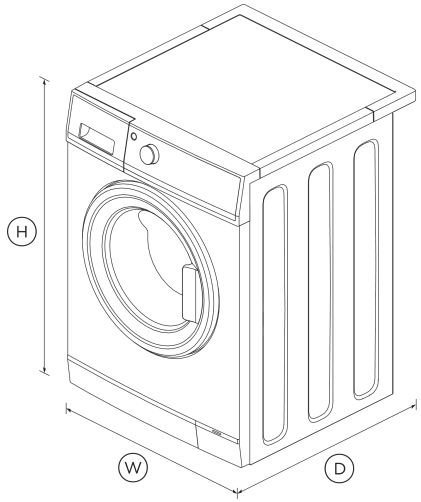

FEATURES & BENEFITS

Two In One Convenience

This 60cm model fits into a standard space and does the work of a washer and dryer combined – offering a complete laundry solution.

Complete Fabric Care

Designed to care for every type of fabric with specialised cycles. The option of low-temperature drying helps prevent fabric damage, and a reverse-tumble drying action minimises tangling.

Add A Garment

Add a Garment allows you to pause your wash cycle, add or remove an item, then carry on washing.

Hot Spin Technology

Hot spin technology reduces moisture content to speed up the drying process – saving time and energy.

Quick Cycle Times

Wash and dry an average load in three hours or less.

Easy Installation

All that's required is a cold water inlet, a drain and power – no venting required.

SPECIFICATIONS

Capacity

Capacity	Wash (8.5kg), + Dry (5kg)

Consumption

Water consumption per cycle	7.5L/kg
Water rating	3 ticks

Dry Cycles

Cottons	•
Dryness levels	3
Everyday	•
Heavy	•
Synthetics	•
Towels	•

Features

Add a garment (immediate door opening)	•
Anti-fungal door gasket	•
Auto out of balance correction	•

Controlled cold	•
Delay start	•
Detergent dispenser	Manual
Door and gasket flushing	•
Fabric softener dispenser	Manual
Flood protection	•
Interior light	•
Keylock	•
Pre Wash	•
Progress indicator	•
Rinse +	•
SmartTouch™ control dial	•
Stainless steel drum	•
Time to go	•
Water supply	Cold
Water temperature controls	5
Wrinkle Free	•

Performance

Auto-Lint disposal	•
Maximum spin speed	1400 rpm
Number of spin speeds	5
SmartDrive™ technology	•
Vortex wash	•

Product dimensions

Depth	645 mm
Height	850 mm
Width	600 mm

Wash Cycles

Allergy	•
Cottons	•
Customise cycle	•
Delicate	•
Drum Clean	•
Everyday	•
Heavy	•
Quick 30	•
Rinse	•
Sanitise	•
Spin	•
Synthetics	•
Towels	•

SKU	93235

The product dimensions and specifications in this page apply to the specific product and model. Under our policy of continuous improvement, these dimensions and specifications may change at any time. You should therefore check with Fisher & Paykel's Customer Care Centre to ensure this page correctly describes the model currently available. © Fisher & Paykel Appliances Ltd 2020

Other product downloads available at fisherpaykel.com

- Energy Label
- Installation & User Guide (English)
- Water Efficiency Label

Where applicable:

All appliances use energy, and energy usage typically generates carbon emissions. **Fisher & Paykel Appliances' In-use Energy Carbon Emissions Estimate** indicates carbon emissions from a product's in-use energy. This is calculated either annually or per cycle, using the product's market-specific energy label energy consumption data multiplied by the carbon emissions factor for energy in your country or region.

Our In-use Energy Carbon Emissions Estimate is designed to assist customers in making informed purchasing decisions when comparing different Fisher & Paykel products. For example, a heat pump dryer typically has a lower In-use Energy Carbon Emissions Estimate than a vented dryer.

24/7

A PEACE OF MIND SALE
24 Hours 7 Days a Week Customer Support
T +65 6741 0777 Wwww.fisherpaykel.com