24" Series 5 Integrated Insert Range Hood

Series 5 | Integrated

Stainless Steel



With edge-to-edge extraction, this efficient, stylish range hood is perfectly hidden away in your cabinetry.

- With four fan speeds, select the perfect extraction rate for your cooking
- Perimeter extraction creates a stylish look with efficient removal of steam and odors
- Powerful 600CFM maximum airflow

DIMENSIONS

Height	13 3/4 "
Width	20 7/8 "
Depth	11 "

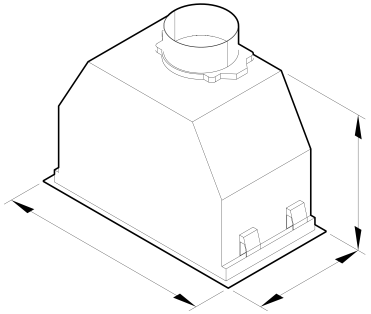

FEATURES & BENEFITS

Quiet And Effective

This vent hood features four fan speeds providing powerful extraction to quickly remove odours and steam. As odors can linger in the kitchen well after cooking is finished, the timer keeps the vent hood working for up to 15 minutes before automatically turning off.

Simple Controls

This Fisher & Paykel vent hood features a sleek and easy to use soft-touch control panel. Lights provide superb illumination over the entire cooking surface.

Easy Cleaning

The stainless steel finish is easily wiped clean. Multi-layered, dishwasher safe filters trap grease effectively and can easily be removed for cleaning.

Complementary Design

This vent hood can be built into your cabinetry for a seamless look. Its stainless steel finish is designed to match the rest of Fisher & Paykel's kitchen appliance family.

SPECIFICATIONS

Accessories (sold separately)

Light bulb	791961

Fan ratings

Maximum air movement	600 CFM

Installation and cleaning

Air outlet size	6 "
Dishwasher safe filters	2
Ducted	Top extraction

Performance

Extraction type	Perimeter
Fan speeds	4
Filter type	Mesh
Number of filters	2

Power requirements

Lighting power	50 W
Motor power	530 W

Supply frequency	60 Hz
Supply voltage	120 V
Total Power	630 W

Product dimensions

Depth	11 "
Height	13 3/4 "
Width	20 7/8 "

Ventilation features

Light type	LED
Timer function	•

SKU	50085

The product dimensions and specifications in this page apply to the specific product and model. Under our policy of continuous improvement, these dimensions and specifications may change at any time. You should therefore check with Fisher & Paykel's Customer Care Centre to ensure this page correctly describes the model currently available. © Fisher & Paykel Appliances Ltd 2020

Other product downloads available at fisherpaykel.com

- DXF
- Archicad
- Data Sheet (English)
- DWG
- Revit
- Rhino
- Right To Repair Declaration (English, Canadian French)
- SketchUp

- Installation & User Guide (English, Canadian French)

Where applicable:

All appliances use energy, and energy usage typically generates carbon emissions. **Fisher & Paykel Appliances' In-use Energy Carbon Emissions Estimate** indicates carbon emissions from a product's in-use energy. This is calculated either annually or per cycle, using the product's market-specific energy label energy consumption data multiplied by the carbon emissions factor for energy in your country or region.

Our In-use Energy Carbon Emissions Estimate is designed to assist customers in making informed purchasing decisions when comparing different Fisher & Paykel products. For example, a heat pump dryer typically has a lower In-use Energy Carbon Emissions Estimate than a vented dryer.

24/7

A PEACE OF MIND SALE
24 Hours 7 Days a Week Customer Support

T 1.888.936.7872 Wwww.fisherpaykel.com