24" Series 9 Minimal Compact Combi-Steam Oven

Series 9 | Minimal

Black Glass



Designed to be the cornerstone of any kitchen solution, our Combination Steam Oven is engineered for the home chef. In compact size, this oven can be placed almost anywhere.

- 23 oven functions including Steam, Sous Vide, Air Fry and Crisp Regenerate
- With steam cooking, convection cooking, or a combination of both
- Pair with our Vacuum Seal Drawer companion product for effortless Sous Vide preparation
- Guided touchscreen cooking makes it simple to cook by food, function or recipe

DIMENSIONS

Height	18 "
Width	23 5/8 "
Depth	22 1/4 "

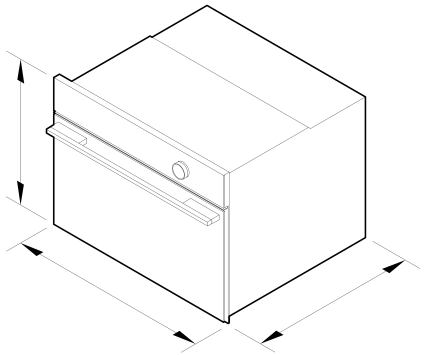

FEATURES & BENEFITS

Combination Cooking

Give every ingredient the respect it deserves with combination steam cooking. Using a fusion of dry convection heat with variable amounts of steam, you can easily retain the delicate texture of ingredients like salmon and snapper, the vitamins and minerals of greens, or the depth of flavour of a perfect cut of meat.

Mastery Of Temperature

Elevate your meals with the precise temperature and humidity control of steam cooking. Steam cooking has a gentler heat transfer into the food, so you get nutritious and delicious results that are moist and tender on the inside, crisp and flaky on the outside, all with minimal effort.

Preserve Flavour And Nutrients

Cooking with steam creates dishes that are full of flavour, while preserving all the vitamins, minerals and textures of delicate ingredients, like fish and seafood. With five steam-only cooking functions, including Sous vide, Steam and Steam Proof, you can use steam to create healthier dishes that get the best out of each component on the plate.

Multi-Function Flexibility

A truly multiple function oven where both steam-only and convection-only cooking mediums can stand on their own merits. You have the freedom to choose – whether it's dry heat or moist heat, or a combination of the two – each delivering different cooking results. Purchase our Wireless Temperature Sensor accessory and precisely monitor cooking in real time (accessory sold separately).

Design Freedom

With a matte black glass finish, this Minimal style oven blends seamlessly, enhancing your kitchen design without dominating it. It’s understated and elegant, whether on its own or part of a matching appliance set. Pair with a Vacuum Seal Drawer for the ultimate kitchen solution.

Cook With Confidence

Using the intuitive touchscreen interface, you can cook with a favorite method, a hero ingredient, or a go-to cooking function or recipe. Your oven will guide you through steps, or change temperature and heat type automatically, depending on your selection.

Reheat And Restore

Give your leftovers a new life by reheating foods with steam, which regenerates moisture levels so meals come out fresh and delicious. Use Steam Regenerate to reheat meals such as roast and risotto, while Crisp Regenerate is perfect for refreshing pastries, bread and pizza.

SPECIFICATIONS

Accessories (included)

Broil pan	1
Broil rack	1
Chromed shelf runners	•
Descale solution	2 sachets, Part 580925
Large steam dish	1
Perforated large steam dish	1
Perforated small steam dish	1
Wire shelf	1
Wired temperature sensor	1

Capacity

Shelf positions	4
Total capacity	1.9 cu ft
Usable capacity	1.6 cu ft
Water tank capacity	50.7

Cleaning

Acid resistant graphite enamel	•
Descale cycle	•
Drying cycle	•
Removable oven door	•
Removable oven door inner glass	•
Removable side ladders	•
Removable water tank	•
Steam clean (oven)	•

Consumption

Energy usage	193kWh/year
In-use energy carbon emissions estimate	24.4kgCO2e/year

Controls

Adjustable audio and display settings	•
Audio feedback	•
Automatic cooking/minute timer	•
Automatic pre-set temperatures	•
Delay start	•
Electronic clock	•
Electronic oven control	•
Guided cooking by food types	•
Internal Light	•
Intuitive touchscreen display	•
Multi-language display	UK English
Sabbath mode with Star K certification	•
Smart appliance	•
Soft close doors	•
True convection oven	•
Turned stainless steel dials with illuminated halos	•
Wireless temperature sensor compatible	•

Functions

Aero Broil	•
Aero™ Bake	•
Air fry	•
Bake	•
Classic bake	•
Crisp regenerate	•
Maxi Broil	•
Number of functions	23
Pastry Bake	•
Pizza bake	•
Roast	•
Slow cook	•
Sous vide	•
Steam	•
Steam clean (oven)	•
Steam defrost	•
Steam proof	•
Steam regenerate	•
True Aero	•
True Aero + High steam	•
True Aero + Low steam	•
True Aero + Medium steam	•
Vent bake	•
Warm	•

Performance

ActiveVent™ system	•
AeroTech™ technology	•
Automatic rapid pre-heat	•
SteamTechnology	•
Temperature range	95 °F - 445 °F
Whisper Quiet Cooking	•

Power requirements

Amperage	16.6 - 19.4 A
Supply frequency	60 Hz
Supply voltage	208 - 240 V

Product dimensions

Depth	22 1/4 "
Height	18 "

Width	23 5/8 "

Safety

Balanced oven door	•
Control panel key lock	•
CoolTouch door	•
Non-tip shelves	•
Safety thermostat	•

SKU	82605

The product dimensions and specifications in this page apply to the specific product and model. Under our policy of continuous improvement, these dimensions and specifications may change at any time. You should therefore check with Fisher & Paykel's Customer Care Centre to ensure this page correctly describes the model currently available. © Fisher & Paykel Appliances Ltd 2020

Other product downloads available at fisherpaykel.com

- Energy Label (English, Canadian French)
- Installation Guide (English)
- Installation Guide (Canadian French)
- Installation Guide (Spanish)
- Installation Guide (Spanish)
- Planning Guide - 24" Minimal Ovens and Companions (English)
- California Warning Proposition 65 (English, Spanish, Canadian French, Chinese)
- Revit
- Rhino
- Right To Repair Declaration (English, Canadian French)
- SketchUp
- User Guide (English)
- User Guide (Canadian French)

Where applicable:

All appliances use energy, and energy usage typically generates carbon emissions. **Fisher & Paykel Appliances' In-use Energy Carbon Emissions Estimate** indicates carbon emissions from a product's in-use energy. This is calculated either annually or per cycle, using the product's market-specific energy label energy consumption data multiplied by the carbon emissions factor for energy in your country or region.

Our In-use Energy Carbon Emissions Estimate is designed to assist customers in making informed purchasing decisions when comparing different Fisher & Paykel products. For example, a heat pump dryer typically has a lower In-use Energy Carbon Emissions Estimate than a vented dryer.



A PEACE OF MIND SALE
24 Hours 7 Days a Week Customer Support

T 1.888.936.7872 **W**www.fisherpaykel.com