Oven, 30", 10 Function, Self-cleaning

Series 9 | Professional

A highlight of the Fisher & Paykel range, this Series 9 oven ensures that every dish you create is cooked to perfection.

DIMENSIONS

Height	**27 1/8**
Width	**29 3/4**
Depth	**23 5/16**

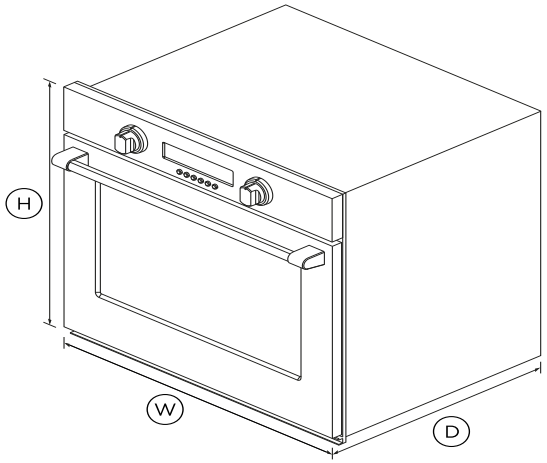

SPECIFICATIONS

Capacity

Shelf positions	**8**

Controls

Halogen lights	**3**
True convection oven	•

Functions

Bake	•
Broil	•
Convection Broil	•
Convection bake	•
Convection pastry	•
Maxi Broil	•
Number of functions	**10**
Pastry Bake	•
Roast	•
True convection	•
Warm	•

Performance

Broil power	**4;400W**

Power requirements

Rated current	**30A**
Supply frequency	**60Hz**
Supply voltage	**120 - 240V**

Product dimensions

Depth	**23 5/16**
Height	**27 1/8**
Width	**29 3/4**

SKU	71377

The product dimensions and specifications in this page apply to the specific product and model. Under our policy of continuous improvement, these dimensions and

specifications may change at any time. You should therefore check with Fisher & Paykel's Customer Care Centre to ensure this page correctly describes the model currently available. ? Fisher & Paykel Appliances Ltd 2020

A PEACE OF MIND SALE

24 Hours 7 Days a Week Customer Support

T 1.888.936.7872 **W**www.fisherpaykel.com