Series 11 Integrated Tall Double DishDrawer Dishwasher

Series 11 | Integrated

Panel Ready



Integrates seamlessly into kitchen cabinetry. Each drawer features a premium stainless steel interior and operates independently, for flexible washing.

- Eight wash cycles from Heavy to Light, including Auto, 60min and Glassware
- Fits plates up to 310mm, with flexible racking to accommodate other large cookware
- With soft-close drawers, and knock to pause convenience
- Wi-Fi connected for remote control and helpful alerts using the Haier Smart Home app

DIMENSIONS

Height	865 - 925 mm
Width	599 mm
Depth	553 mm

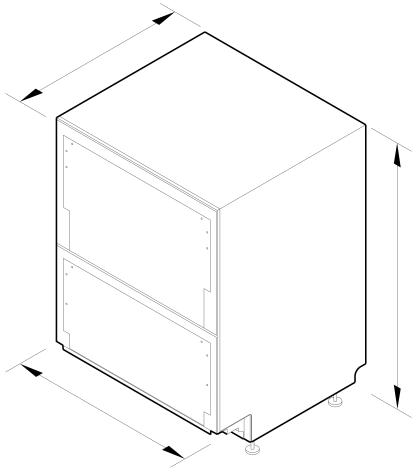

FEATURES & BENEFITS

Seamless Integration

Install your DishDrawer™ Dishwasher into an existing kitchen space or integrate into kitchen cabinetry. The touch-sensitive control panel is located inside this Integrated model, leaving an uninterrupted exterior that blends seamlessly with surrounding cabinetry.

Ease Of Use

DishDrawer™ Dishwashers are beautiful to use with soft-close drawers. The tall top drawer fits your larger plates and dishes up to 310mm, while the bottom drawer is ideal for small washes. Flexible racking includes height-adjustable cup racks and wine glass supports.

True Half Load

Both drawers fit a true half load. Each drawer operates independently, so you can wash one load while stacking the other drawer, or wash simultaneously on separate cycles.

Flexible Wash Options

Eight wash programs including Auto, 60min and Glassware, while modifiers such as Sanitise, Dry+ and Quiet provide added wash flexibility. The Quiet wash modifier reduces the noise on some cycles while maintaining performance – perfect for late night washing.

Design Quality

Every detail has been carefully crafted using quality materials, from the easy-to-clean stainless steel interior, knock to pause, and the spray arm sensor that detects jams for increased wash confidence.

Control from anywhere

Get the most out of your connected appliance with the Haier Smart Home app. Connect and monitor your smart DishDrawer™ Dishwasher while conveniently accessing the latest tips, remote status notifications, and more.

Efficient Performance

This DishDrawer™ Dishwasher uses the water it needs without compromising on wash performance.

SPECIFICATIONS

Accessories (included)

Cutlery basket	•
Kickstrip	true
Knife clip and multipurpose clip	•

Accessories (sold separately)

Door panel black stainless steel	ADDD60DTPB
Door panel stainless steel	ADDD60DTPX
Handle kit Contemporary round, aluminium	AHS-OBDD-60S
Handle kit Contemporary square fine, aluminium	AHD5-OBDD-60S
Handle kit Contemporary square fine, black	AHD5-OBDD-60SB
Handle kit Contemporary square, aluminium	AHD3-OBDD-60S
Handle kit Contemporary square, black	AHD3-OBDD-60B

Capacity and loading

Accommodates round plates up to (lower drawer)	280mm
Accommodates round plates up to (upper drawer)	310mm
Adjustable height, foldable cupracks	•
Fold down tines	•
Pitch adjustable tines	•
Place settings	16
Place settings per drawer	8
Wine glass supports with stemware grippers	•

Connected Features

Alerts and notifications	•
Education and onboarding	•
Monitoring	•
Software updates	•

Consumption

Cleaning Index	1.21
Drying Index	1.32
Energy consumption	0.538kWh/cycle per drawer
Energy rating	Grade 1
Water consumption	6.8L

Controls

Electronic fault/Diagnostic indicator	•
End of cycle beeps	•
Energy saving delay start option of up to 12 hours	•
Internal wash selector	•
Keylock	•
Knock to pause	•
Rinse aid indicator light	•
Smart appliance	•
Spray arm sensing	•

Features

Built-in water softener	•
Fan assisted drying	•
Flood protection	•
Flow through detergent dispenser	•
Internal tub material	Stainless steel
Motor type	BLDC
Quiet operation	•
SmartDrive™ technology	•
Soft close drawer	•
Three-stage filtration system	•

Performance

Noise on standard cycle top drawer	43 dBA

Power requirements

Dedicated Circuit (A)	10A
Supply frequency	50 Hz
Voltage	220 - 240V

Product dimensions

Depth	553 mm
Height	865 - 925 mm
Width	599 mm

Wash Program Modifiers

Dry +	•
Quiet	•
Sanitise	•
Wash modifiers	3

Wash Programs

60 min	•
Auto	•
Eco	•
Glassware	•
Heavy	•
Light	•
Medium	•
Rinse	•
Wash programs	8

Water connection

Water pressure	100kPa - 1000kPa

Water supply	3/4" BSP (20mm) Connector Water Inlet Hose

SKU	84247

The product dimensions and specifications in this page apply to the specific product and model. Under our policy of continuous improvement, these dimensions and specifications may change at any time. You should therefore check with Fisher & Paykel's Customer Care Centre to ensure this page correctly describes the model currently available. © Fisher & Paykel Appliances Ltd 2020

Other product downloads available at fisherpaykel.com

- DXF
- DWG
- Installation Guide (English)
- Revit
- Rhino
- Restriction of the Use of Hazardous Substances (Chinese)
- SketchUp
- User Guide (English)
- User Guide (Chinese)
- Water Efficiency Label

Where applicable:

All appliances use energy, and energy usage typically generates carbon emissions. **Fisher & Paykel Appliances' In-use Energy Carbon Emissions Estimate** indicates carbon emissions from a product's in-use energy. This is calculated either annually or per cycle, using the product's market-specific energy label energy consumption data multiplied by the carbon emissions factor for energy in your country or region.

Our In-use Energy Carbon Emissions Estimate is designed to assist customers in making informed purchasing decisions when comparing different Fisher & Paykel products. For example, a heat pump dryer typically has a lower In-use Energy Carbon Emissions Estimate than a vented dryer.