# 60cm Series 9 Minimal Pyrolytic Oven

Series 9 | Minimal

Black



A highlight of the Fisher & Paykel collection, this Series 9 oven ensures that every dish you create is cooked to perfection.

- 85L total capacity, with 11 oven functions including Pizza Bake and Roast
- Moisture level control with ActiveVent™ technology
- Pyrolytic self-cleaning function breaks down food residue for an easy clean
- Non-tip, full-extension shelves for safe removal of hot dishes

## DIMENSIONS

| | |
|---|---|
| Height | 598 mm |
| Width | 596 mm |
| Depth | 565 mm |

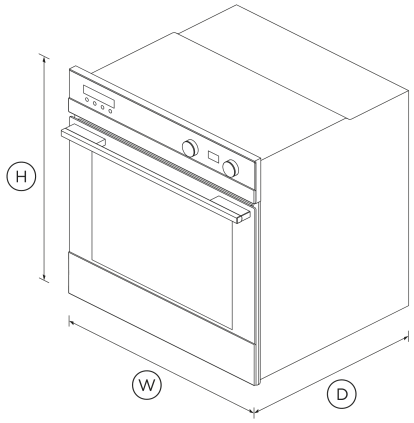


## FEATURES & BENEFITS

### Multi-Function Flexibility

11 functions including Roast, Pastry Bake and Fan Forced mean no matter what you're cooking, you've got the right heat to match.

### Beauty Of Choice

With the choice of stylish stainless steel or elegant black, you can choose the finish that complements your kitchen design best.

### Generous Capacity

With a generous sized internal cavity, you can create several dishes at once using multiple shelves.

### Activevent Technology

With ActiveVent™ technology for optimised moisture levels and AeroTech™ for even heat distribution, you'll get perfect results even when using multiple shelves.

### Simple Cleaning

Pyrolytic self-clean breaks down food residue at a very high temperature, leaving a light ash that's easily removed with a damp cloth.

### Safe And Sound

The CoolTouch door features triple glazing and a cooling system that ensures it's safe to touch from the outside – protecting both your hands and the surrounding cabinetry.

## SPECIFICATIONS

### Accessories (included)

| | |
|---|---|
| Full extension sliding shelves | 2 sets |
| Grill rack | 1 set |
| Roasting dish | 1 |
| Wired temperature sensor | 1 |

### Accessories (sold separately)

| | |
|---|---|
| Optional Accessory round handle | Part 81645 |

### Capacity

| | |
|---|---|
| Shelf positions | 6 |
| Total capacity | 85 L |
| Usable capacity | 72 L |

### Cleaning

| | |
|---|---|
| Acid resistant graphite enamel | • |
| Pyrolytic self-clean | • |

| | |
|---|---|
| Removable oven door | • |
| Removable oven door inner glass | • |
| Removable side ladders | • |

### Controls

| | |
|---|---|
| Audio feedback | • |
| Automatic cooking/minute timer | • |
| Automatic pre-set temperatures | • |
| Celsius/Fahrenheit temperature | • |
| Electronic clock | • |
| Electronic oven control | • |
| Soft close doors | • |

### Functions

| | |
|---|---|
| Bake | • |
| Classic bake | • |
| Fan bake | • |
| Fan forced | • |
| Fan grill | • |
| Grill | • |
| Number of functions | 11 |
| Pastry Bake | • |
| Pyrolytic self-clean (Function) | • |
| Roast | • |
| Vent bake | • |
| Warm | • |

### Performance

| | |
|---|---|
| ActiveVent™ system | • |
| AeroTech™ technology | • |
| Automatic rapid pre-heat | • |
| Grill power | 3000 W |
| Whisper quiet cooking | • |

### Power requirements

| | |
|---|---|
| Amperage | 15 A |
| Supply frequency | 50 Hz |
| Supply voltage | 220 - 240 V |

### Product dimensions

| | |
|---|---|
| Depth | 565 mm |
| Height | 598 mm |
| Width | 596 mm |

### Safety

| | |
|---|---|
| Balanced oven door | • |
| Catalytic venting system | • |
| Control panel key lock | • |
| CoolTouch door | • |
| Non-tip shelves | • |

| | |
|---|---|
| SKU | 82148 |

The product dimensions and specifications in this page apply to the specific product and model. Under our policy of continuous improvement, these dimensions and specifications may change at any time. You should therefore check with Fisher & Paykel's Customer Care Centre to ensure this page correctly describes the model currently available. © Fisher & Paykel Appliances Ltd 2020

**Other product downloads available at fisherpaykel.com**

- DXF
- Data Sheet (English)
- DWG
- Installation Guide (Chinese)
- Revit
- Rhino
- Restriction of the Use of Hazardous Substances (Chinese)
- Restriction of the Use of Hazardous Substances (Chinese)
- Restriction of the Use of Hazardous Substances (Chinese)
- SketchUp
- User Guide (Chinese)

**Where applicable:**

All appliances use energy, and energy usage typically generates carbon emissions. **Fisher & Paykel Appliances' In-use Energy Carbon Emissions Estimate** indicates carbon emissions from a product's in-use energy. This is calculated either annually or per cycle, using the product's market-specific energy label energy consumption data multiplied by the carbon emissions factor for energy in your country or region.

Our In-use Energy Carbon Emissions Estimate is designed to assist customers in making informed purchasing decisions when comparing different Fisher & Paykel products. For example, a heat pump dryer typically has a lower In-use Energy Carbon Emissions Estimate than a vented dryer.