Series 9 Integrated Double DishDrawer Dishwasher

Series 9 | Integrated

Panel Ready

Introducing the next evolution of DishDrawer™ Dishwasher design. The Integrated Double DishDrawer™ Dishwasher delivers advanced performance, quiet efficiency and seamless integration within kitchen cabinetry. New wash technology offers a step up in energy and water efficiency, engineered for real life and shaped by decades of DishDrawer™ Dishwasher innovation.

- Wash one, stack another. Independent drawers run separately or together, fitting plates up to 280mm in diameter
- Capacitive touch controls, refined styling and Haier Smart Home app connectivity bring intuitive convenience to everyday dish care
- Adaptable racking fits everything from glassware to cookware, offering flexibility for every occasion
- Versatile wash cycles and modifiers ensure clean results, while fan-assisted drying helps leave dishes ready to use

DIMENSIONS

Height	820 - 880 mm
Width	599 mm
Depth	553 mm

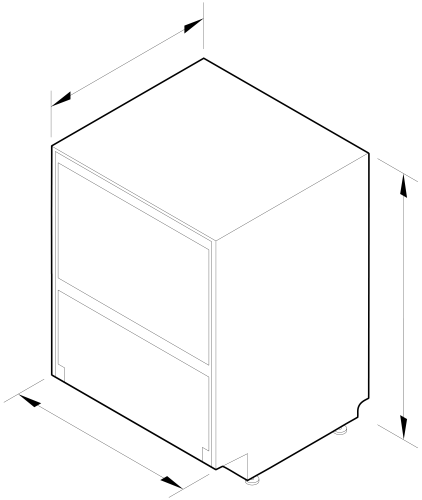

SPECIFICATIONS

Accessories (included)

Cutlery basket	•

Accessories (sold separately)

Door panel black stainless steel	ADDD60DPB
Door panel stainless steel	ADDD60DPX
Handle kit Contemporary brushed black	AHD7DDDW60B
Handle kit Contemporary brushed silver	AHD7DDDW60S
Handle kit Minimal black	AHM1DDDW60B
Handle kit Minimal grey	AHM1DDDW60G

Capacity and loading

Accommodates round plates up to	280mm
Adjustable height, foldable cupracks	•
Fold down tines	•
Pitch adjustable tines	•
Place settings	16
Place settings per drawer	8
Wine glass supports	•

Connected Features

Alerts and notifications	•
Education and onboarding	•
Energy consumption monitoring	•
Monitoring	•
Remote operation	•
Software updates	•

Consumption

Energy rating	Grade 1

Controls

Black touch concealed interface	•
Electronic fault/Diagnostic indicator	•

End of cycle beeps	•
Energy saving delay start option of up to 12 hours	•
Keylock	•
Knock to pause	•
Rinse aid indicator light	•
Smart appliance	•

Features

Advanced filtration	•
Built-in water softener	•
Fan assisted drying	•
Flood protection	•
Flow through detergent dispenser	•
Motor type	BLDC
Quiet operation	•
SmartDrive™ technology	•
Soft close drawer	•
Three-stage filtration system	•
Variable wash pressure technology	•

Performance

Noise emissions	43 dBA

Power requirements

Dedicated Circuit (A)	10A
Rated Power (W)	2400 W
Supply frequency	50 Hz
Voltage	220 - 240V

Product dimensions

Depth	553 mm
Height	820 - 880 mm
Width	599 mm

Wash Program Modifiers

Dry +	•
Gentle	•
Intensive	•
Wash modifiers	3

Wash Programs

60 min	•
Eco	•
Heavy	•
Hygiene	•
Light	•
Medium	•
Wash programs	6

Water connection

Water pressure	30kPa - 1000 kPa
Water supply	3/4" BSP (20mm) Connector Water Inlet Hose

SKU	85778

The product dimensions and specifications in this page apply to the specific product and model. Under our policy of continuous improvement, these dimensions and specifications may change at any time. You should therefore check with Fisher & Paykel's Customer Care Centre to ensure this page correctly describes the model currently available. © Fisher & Paykel Appliances Ltd 2020

Other product downloads available at fisherpaykel.com

- DWG
- DXF
- First Use (Chinese)
- First Use (English)
- Installation Guide (Chinese)
- Installation Guide (English)
- Planning Guide (English)
- Revit
- Rhino
- Restriction of the Use of Hazardous Substances (Chinese)
- Safety & Warnings (Chinese)
- Safety & Warnings (English)
- SketchUp

Where applicable:

All appliances use energy, and energy usage typically generates carbon emissions. **Fisher & Paykel Appliances' In-use Energy Carbon Emissions Estimate** indicates carbon emissions from a product's in-use energy. This is calculated either annually or per cycle, using the product's market-specific energy label energy consumption data multiplied by the carbon emissions factor for energy in your country or region.

Our In-use Energy Carbon Emissions Estimate is designed to assist customers in making informed purchasing decisions when comparing different Fisher & Paykel products. For example, a heat pump dryer typically has a lower In-use Energy Carbon Emissions Estimate than a vented dryer.