569L Series 7 French Door Refrigerator Freezer

Series 7 | Contemporary

Stainless Steel | French hinge



This refrigerator freezer has a stylish stainless steel finish, with large capacity and plenty of flexible storage space.

- ActiveSmart™ technology to help keep food fresher for longer by stopping temperature fluctuation
- Spacious bottom freezer with full extension drawer gives easy access to frozen goods.

DIMENSIONS

Height	1790 mm
Width	900 mm
Depth	695 mm

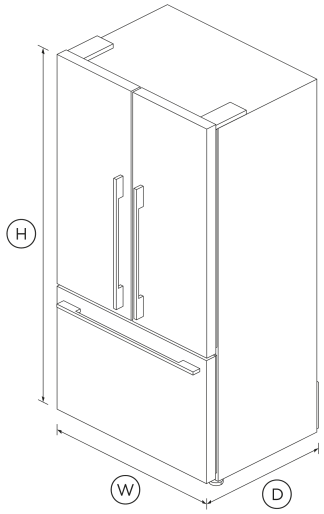

FEATURES & BENEFITS

ActiveSmart™ Foodcare

Every time you open your refrigerator, the temperature around your food changes. ActiveSmart™ foodcare adjusts airflow to create a stable temperature, helping your food stay fresher for longer.

Simple storage

This fridge is designed to make it simple for you to store, access and remove food. Storage bins give you full access inside when they're pulled open and can be easily removed to clean. Our flexible shelving also gives you more storage options.

Easy cleaning

No more permanent dirty marks with our EZKleen feature for stainless steel refrigerators. Anti-fingerprint coating means you simply wipe clean any marks. Spill-safe secure glass shelves easily capture any drips or leaks.

Humidity control

Your fruit and veges need different environments. The humidity control slides in each storage bin create a microclimate that helps keep food fresher for longer.

Design quality

Our refrigerators are designed and built using quality materials. We use real stainless steel, and solid glass for shelving as well as in our wine cabinet doors.

Clever energy

Your refrigerator adapts to daily use by cooling and defrosting only when needed. This means your refrigerator uses the energy it needs without compromising on food care.

Complementary Design

With their premium handle styling and stainless steel finish, our fridges are designed to match the rest of Fisher & Paykel's kitchen appliance family.

SPECIFICATIONS

Capacity

Total net volume	569L
Volume	569 L
Volume freezer	152 L
Volume refrigerator	417 L

Connected Features

Alerts and notifications	•
Education and onboarding	•
Remote operation	•
Software updates	•

Consumption

Energy rating	E

Energy usage	297kWh/year
In-use energy carbon emissions estimate	57.6kgCO2e/year

Features

Adjustable door shelves	6
Adjustable glass shelves	3
Covered door shelves	2
Deli storage bins	2
Door alarm	•
Front levelling feet	•
Fruit and vegetable bins	2
Full extension runners	•
LED lighting	•
Smart appliance	•
SmartTouch control panel	•
Spill proof removable bins	•
Stackable bottle holders	4

Freezer Features

Bottle chill	•
Door alarm	•
Fast freeze	•
LED Lighting	•

Performance

ActiveSmart™ Foodcare	•
Adaptive defrost	•
Frost free	•
Frost free freezer	•
Humidity control system	•
Inverter controlled compressor	•
Noise emissions	42 dBA
Noise emissions class	D
R600a refrigerant	•
Sabbath mode	•

Power requirements

Rated current	10 A
Supply frequency	50 Hz
Supply voltage	220 - 240 V

Product dimensions

Depth	695 mm
Depth (including handles)	735 mm
Height	1790 mm
Height to top of cabinet	1790 mm
Minimum air clearance - each side	20 mm
Minimum air clearance - on top	50 mm
Width	900 mm

Variable Temp Compartment

Bottle chill mode	•

SKU	26687

The product dimensions and specifications in this page apply to the specific product and model. Under our policy of continuous improvement, these dimensions and specifications may change at any time. You should therefore check with Fisher & Paykel's Customer Care Centre to ensure this page correctly describes the model currently available. © Fisher & Paykel Appliances Ltd 2020

Other product downloads available at fisherpaykel.com

- Archicad
- Data Sheet (English)
- Declaration of Conformity (English)
- DWG
- Energy Label
- Installation Guide (English)
- Product Information Sheet
- Product Information Sheet
- Product Information Sheet
- Revit
- SketchUp
- User Guide (English)

Where applicable:

All appliances use energy, and energy usage typically generates carbon emissions. **Fisher & Paykel Appliances' In-use Energy Carbon Emissions Estimate** indicates carbon emissions from a product's in-use energy. This is calculated either annually or per cycle, using the product's market-specific energy label energy consumption data multiplied by the carbon emissions factor for energy in your country or region.

Our In-use Energy Carbon Emissions Estimate is designed to assist customers in making informed purchasing decisions when comparing different Fisher & Paykel products. For example, a heat pump dryer typically has a lower In-use Energy Carbon Emissions Estimate than a vented dryer.

24/7

A PEACE OF MIND SALE
24 Hours 7 Days a Week Customer Support
T 08000 886 605 Wwww.fisherpaykel.com